LOT 1 IN OR 1197/995 (EX PT
R/W IN OR 1930/1280 & UTIL
ESMT IN OR 910/1136)

JAX FOODS LLC/
3770 SALT MEADOW COURT SOUTH
JACKSONVILLE, FL 32224

2024

44-2N-27-1970-0001-0000

BUILDING CHARACTERISTICS

ELEMENT	CD	CONSTRUCTION
Exterior Wall	16	WD FR STUC 100
Roof Structur	09	RIDGE FRME 100
Roof Cover	04	BUILT-UP 100
Interior Wall	08	DECORATIVE 60
Interior Wall	05	DRYWALL 40
Interior Floo	15	HARDTILE 100
Ceiling	01	FIN.SUSPD 100
Air Condition	04	ROOF TOP 100
Heating Type	04	AIR DUCTED 100
Fixtures		16 100
Frame	02	WOOD FRAME 100
Story Height		16 100
RMS		4 100
Stories	1.	1. 100
Units		0 100
Occupancy	00	NONE 100
Quality	03	Quality Level 03
DOR CODE	2200	DRIVE-IN REST.
MAP NUM		MKT AREA 04
NEIGHBORHOOD/LOC	4001.00	

AREA TYPE	TOTAL GROSS AREA	PCT OF BASE	TOT ADJ AREA	SUBAREA MARKET VALUE
BAS	2,988	100	2,988	499,913
CAN	36	30	11	1,840
PTO	804	5	40	6,692
PTO	232	5	12	2,008
TOTALS	4,060		3,051	510,453

MARKET ADJUSTMENTS

TYPE	MDL	EFF. AREA	TOT ADJ PTS	EFF. BASE RATE	REPL. COST NEW	AYB	EYB	ECON	FNCT	AP	NORM	% COND
2201	04	3,051	130.3640	269.85	823,312	2002	2002	0	0	20	18.00	62.00

1 FAST FOOD – 0% - 0 Heated Area: 2988 HX Base Yr

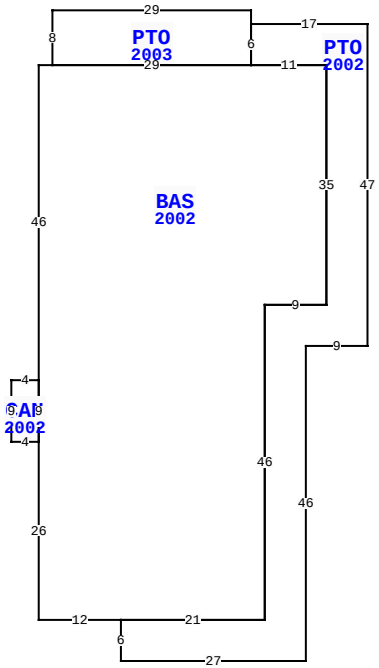

76106 SIDNEY PL, YULEE

BLD DATE		LGL DATE	
XF DATE		LAND DATE	12/19/2018 KK
INC DATE		AG DATE	

NASSAU COUNTY PROPERTY

PAGE 1 of 2 4

VALUATION SUMMARY

VALUATION BY	STANDARD
Tax Group: 4	Tax Dist:
BUILDING MARKET VALUE	510,453
TOTAL MARKET OB/XF VALUE	62,664
TOTAL LAND VALUE - MARKET	379,432
TOTAL MARKET VALUE	952,549
SOH/AGL Deduction	40,333
ASSESSED VALUE	912,216
TOTAL EXEMPTION VALUE	0
BASE TAXABLE VALUE	912,216
TOTAL JUST VALUE	952,549
NCON VALUE	0
INCOME VALUE	952,424
PREVIOUS YEAR MKT VALUE	977,638

KENTUCKY FRIED CHICKEN

PERMIT NUM	DESCRIPTION	AMT	ISSUED
17006130	REMODEL	65,000	07/10/2017
E1529408	CHNGE SRVC	0	06/01/2015
E0209372	CHNGE SRVC	17,000	03/03/2002
B0209412	NEW CONSTR	229,840	03/01/2002
P025436	NEW CONSTR	2,000	01/01/2002
SU990139	SIGN	20,000	03/01/1999

SALES DATA

OFF RECORD Number	DATE	TYPE INST	Q U	V I	RSN CD	SALE PRICE
1197/0995	12/23/2003	WD	U	I	19	586,000
GRANTOR: KFC U S PROPERTIES IN						
GRANTEE: JAX FOODS INC						
1127/1357	4/07/2003	WD	U	I	06	100
GRANTOR: KFC OF AMERICA INC						
GRANTEE: KFC US PROPERTIES I						

BUILDING NOTES

BUILDING DIMENSIONS

BAS=[YR=2002;ORIG=-46,6] W2 S46 S9 S26 E12 E21 N46 E9 N35 W11 W29 $
PTO=[YR=2002;ORIG=0,0] W17 S6 E11 S35 W9 S46 W21 S6 E27 N46 E9 N47 $
PTO=[YR=2003;ORIG=-17,0] N2 W29 S8 E29 N6 $
CAN=[YR=2002;ORIG=-48,52] W4 S9 E4 N9 $
.

EXTRA FEATURES

LN	OB/XF CODE	DESCRIPTION	BLD	CAP	L	W	UNITS	UT	Adj R	ADJ UNIT PRICE	ORIG COND	YEAR ON	YEAR ACTUAL	Q	% COND	OB/XF MKT VALUE	NOTES
1	0803	ASPHALT C	0	0	0	0	22,975.00	SF	2.00	2.00	100	2002	2002	3	50	22,975	
2	0812	CONCRETE C	0	0	0	0	1,680.00	SF	4.00	4.00	100	2002	2002	3	82	5,510	
3	0964	HALON SYST	0	0	4	24	96.00	SF	50.00	50.00	100	2002	2002	3	82	3,936	
4	0964	HALON SYST	0	0	4	8	32.00	SF	50.00	50.00	100	2002	2002	3	82	1,312	
5	0418	EXHST FAN	0	0	0	0	3.00	UT	400.00	400.00	100	2002	2002	3	20	240	
6	0972	ST LGHT UN	0	0	0	0	6.00	UT	2,530.00	2,530.00	100	2002	2002	3	58	8,804	
7	0975	ST LT/ARM	0	0	0	0	3.00	UT	500.00	500.00	100	2002	2002	3	58	870	
8	4950	BOLLARD	0	0	0	0	7.00	UT	100.00	100.00	100	2002	2002	3	100	700	
9	0400	CONC CURB	0	0	0	0	1,237.00	LF	15.00	15.00	100	2002	2002	3	86	15,957	
10	0402	CONC BUMPE	0	0	0	0	7.00	UT	25.00	25.00	100	2002	2002	3	86	151	

TOTAL OB/XF 60,455

LAND DESCRIPTION

LN	USE CODE	CLS	LAND USE DESCRIPTION	CAP	RD	LOC ZONE	FRONT	DEPTH	TOT LND UTS	UNIT TYPE	DT	DPTH FACT	% COND	TOT ADJ	UNIT PRICE	ADJ UNIT PRICE	LAND VALUE	OTHER ADJUSTMENTS AND NOTES	YEAR	DENSITY	DECL	FRZ	YR	CONSRV
1	002200	C	DRIVE-IN	0	0004	CHT	0.00	0.00	47,429.00	SF		1.00	1.00	1.00	8.00	8.00	379,432							

REVIEW DATE 04/11/2024 BY KWA Total Acres: 0.00 Total Land Value: 379,432 Market: 0 Agricultural: 0 Common: 379,432 PRINTED 08/06/2024 BY SYS

LOT 1 IN OR 1197/995 (EX PT
R/W IN OR 1930/1280 & UTIL
ESMT IN OR 910/1136)

JAX FOODS LLC/
3770 SALT MEADOW COURT SOUTH
JACKSONVILLE, FL 32224

2024

44-2N-27-1970-0001-0000

NASSAU COUNTY PROPERTY

BUILDING CHARACTERISTICS

ELEMENT	CD	CONSTRUCTION

DOR CODE	2200	DRIVE-IN REST.	
MAP NUM		MKT AREA	04
NEIGHBORHOOD/LOC	4001.00		

AREA TYPE	TOTAL GROSS AREA	PCT OF BASE	TOT ADJ AREA	SUBAREA MARKET VALUE
TOTALS				

MARKET ADJUSTMENTS

TYPE	MDL	EFF. AREA	TOT ADJ PTS	EFF. BASE RATE	REPL. COST NEW	AYB	EYB	ECON	FNCT		NORM	% COND

VALUATION SUMMARY

VALUATION BY	STANDARD
Tax Group: 4	Tax Dist:
BUILDING MARKET VALUE	510,453
TOTAL MARKET OB/XF VALUE	62,664
TOTAL LAND VALUE - MARKET	379,432
TOTAL MARKET VALUE	952,549
SOH/AGL Deduction	40,333
ASSESSED VALUE	912,216
TOTAL EXEMPTION VALUE	0
BASE TAXABLE VALUE	912,216
TOTAL JUST VALUE	952,549
NCON VALUE	0
INCOME VALUE	952,424
PREVIOUS YEAR MKT VALUE	977,638

PERMIT NUM	DESCRIPTION	AMT	ISSUED

BLD DATE		LGL DATE	
XF DATE		LAND DATE	12/19/2018 KK
INC DATE		AG DATE	

SALES DATA

OFF RECORD Number	DATE	TYPE INST	Q / U	V / I	RSN CD	SALE PRICE
1197/0995	12/23/2003	WD	U	I	19	586,000
GRANTOR: KFC U S PROPERTIES IN						
GRANTEE: JAX FOODS INC						
1127/1357	4/07/2003	WD	U	I	06	100
GRANTOR: KFC OF AMERICA INC						
GRANTEE: KFC US PROPERTIES I						

BUILDING NOTES

BUILDING DIMENSIONS

EXTRA FEATURES

LN	OB/XF CODE	DESCRIPTION	BLD	CAP	L	W	UNITS	UT	Adj R	ADJ UNIT PRICE	ORIG COND	YEAR ON	YEAR ACTUAL	Q	% COND	OB/XF MKT VALUE	NOTES
11	1123	CB 8"	0	0	0	0	300.00	SF	6.15	6.15	100	2002	2002	3	82	1,513	
12	0463	FENCE GATE	0	0	0	0	4.00	UT	300.00	300.00	100	2002	2002	3	58	696	

LAND DESCRIPTION

TOTAL OB/XF 2,209

LN	USE CODE	CLS	LAND USE DESCRIPTION	CAP	RD	LOC ZONE	FRONT	DEPTH	TOT LND UTS	UNIT TYPE	DT	DPTH FACT	% COND	TOT ADJ	UNIT PRICE	ADJ UNIT PRICE	LAND VALUE	OTHER ADJUSTMENTS AND NOTES	YEAR	DENSITY	DECL	FRZ	YR	CONSRV

REVIEW DATE 04/11/2024 BY KWA Total Acres: 0.00 Total Land Value: 379,432 Market: 0 Agricultural: 0 Common: 379,432 PRINTED 08/06/2024 BY SYS