LOT 47
EAST NASSAU WILDLIGHT PH 1C-1
OR 2347/1911

CESSNA JUSTIN HOLLIS/SANTANA LESLIMAR PAGAN
475 BLUE SAZE STREET
ST JOHNS, FL 32259

2024

44-2N-27-1003-0047-0000

BUILDING CHARACTERISTICS

ELEMENT	CD	CONSTRUCTION
Exterior Wall	31	HARDIE BRD 100
Roof Structur	03	GABLE/HIP 100
Roof Cover	03	COMP SHNGL 100
Interior Wall	05	DRYWALL 100
Interior Floo	13	LVT/LAMNT 60
Interior Floo	14	CARPET 40
Air Condition	03	CENTRAL 100
Heating Type	04	AIR DUCTED 100
Bedrooms		4 100
Bathrooms		2.5 100
Frame	02	WOOD FRAME 100
Stories	2.	2. 100
Units		0 100
Occupancy	00	NONE 100
Quality	01	Quality Level 01
DOR CODE	0100	SINGLE FAMILY
MAP NUM		MKT AREA 04
NEIGHBORHOOD/LOC	4086.0100	

AREA TYPE	TOTAL GROSS AREA	PCT OF BASE	TOT ADJ AREA	SUBAREA MARKET VALUE
BAS	1,062	100	1,062	122,640
FGR	571	55	314	36,261
FOP	146	30	44	5,081
FUS	1,434	100	1,434	165,598
PTO	100	5	5	577
STR	64	10	6	693
TOTALS	3,377		2,865	330,850

MARKET ADJUSTMENTS

TYPE	MDL	EFF. AREA	TOT ADJ PTS	EFF. BASE RATE	REPL. COST NEW	AYB	EYB	ECON	FNCT		NORM	% COND
0900	01	2,865	92.3832	115.48	330,850	2022	2022	0	0	0	0.00	100.00

1 SNGL FAM – 100% - 2024 Heated Area: 2496 HX Base Yr 2024

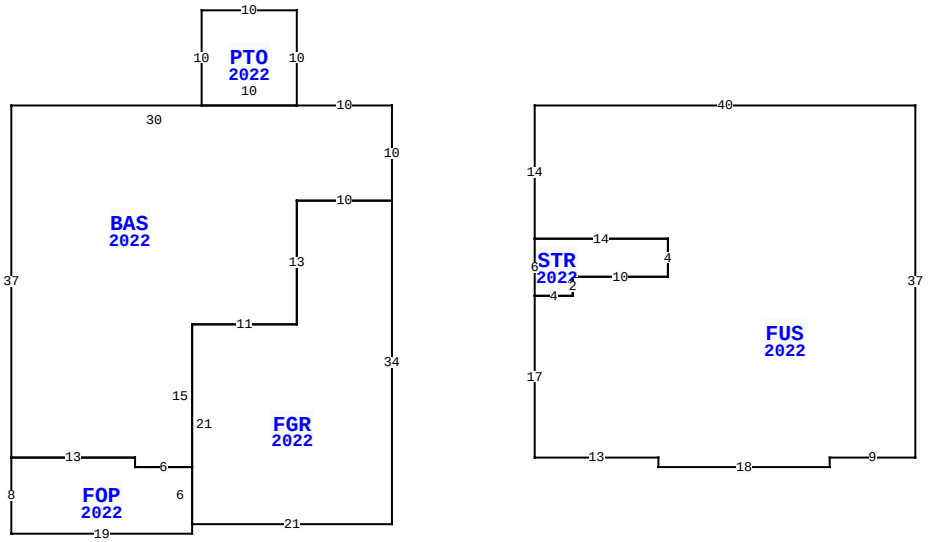

475 BLUE DAZE ST, YULEE

BLD DATE	03/21/2023 NW	LGL DATE	
XF DATE		LAND DATE	
INC DATE		AG DATE	

NASSAU COUNTY PROPERTY

PAGE 1 of 1 4

VALUATION SUMMARY

VALUATION BY		STANDARD
Tax Group: 4	Tax Dist:	
BUILDING MARKET VALUE		330,850
TOTAL MARKET OB/XF VALUE		4,384
TOTAL LAND VALUE - MARKET		60,000
TOTAL MARKET VALUE		395,234
SOH/AGL Deduction		85,488
ASSESSED VALUE		309,746
TOTAL EXEMPTION VALUE	HX HB	50,000
BASE TAXABLE VALUE		259,746
TOTAL JUST VALUE		395,234
NCON VALUE		0
INCOME VALUE		
PREVIOUS YEAR MKT VALUE		378,703

PERMIT NUM	DESCRIPTION	AMT	ISSUED
22004766	CO ISSUED	0	03/29/2022
21007049	NEW CONSTR	363,591	07/10/2021

SALES DATA

OFF RECORD Number	DATE	TYPE INST	Q U	V I	RSN CD	SALE PRICE
2557/1564	4/21/2022	SW	Q	I	01	451,600
GRANTOR: MATTAMY JACKSONVILLE						
GRANTEE: CESSNA JUSTIN H & L						
2475/1329	6/30/2021	SW	Q	V	05	1,388,000
GRANTOR: WILDLIGHT LLC						
GRANTEE: MATTAMY JACKSONVILL						

BUILDING NOTES

BUILDING DIMENSIONS

BAS=[YR=2022] W10PTO=[YR=2022] N10 W10 S10 E10$ W30 S37
FOP=[YR=2022] S8 E19 N1 FGR=[YR=2022] E21 N34 W10 S13 W11
S21$ N6 W6 N1 W13$ E13 S1 E6 N15 E11 N13 E10 N10$ PTR=E15
FUS=[YR=2022] E40 S37 W9 S1 W18 N1 W13 N17 STR=[YR=2022] E4
N2 E10 N4 W14 S6$ E4 N2 E10 N4 W14 N14$ W15$.

EXTRA FEATURES

LN	OB/XF CODE	DESCRIPTION	BLD	CAP	L	W	UNITS	UT	Adj R	ADJ UNIT PRICE	ORIG COND	YEAR ON	YEAR ACTUAL	Q	% COND	OB/XF MKT VALUE	NOTES
1	0811	CONCRETE B	0	100	0	0	843.00	SF	5.20	5.20	100	2022	2022	3	100	4,384	

LAND DESCRIPTION

TOTAL OB/XF 4,384

LN	USE CODE	CLS	LAND USE DESCRIPTION	CAP	RD	LOC ZONE	FRONT	DEPTH	TOT LND UTS	UNIT TYPE	DT	DPTH FACT	% COND	TOT ADJ	UNIT PRICE	ADJ UNIT PRICE	LAND VALUE	OTHER ADJUSTMENTS AND NOTES	YEAR	DENSITY	DECL	FRZ	YR	CONSRV
1	000100	C	SFR	100		PD -	E 0.00	0.00	1.00	LT		1.00	1.00	1.00	60,000.00	60,000.00	60,000							

REVIEW DATE 03/28/2022 BY DJ Total Acres: 0.00 Total Land Value: 60,000 Market: 0 Agricultural: 0 Common: 60,000 PRINTED 08/06/2024 BY SYS