LOT 42
EAST NASSAU WILDLIGHT PH 1C-1
REPLAT OR 2484/475

MATNER JAMIE M & RICHARD R
746 LOBLOLLY LANE
YULEE, FL 32097

2024

44-2N-27-1003-0042-0000

NASSAU COUNTY PROPERTY

BUILDING CHARACTERISTICS

ELEMENT	CD	CONSTRUCTION
Exterior Wall	31	HARDIE BRD 100
Roof Structur	03	GABLE/HIP 100
Roof Cover	03	COMP SHNGL 100
Interior Wall	05	DRYWALL 100
Interior Floo	13	LVT/LAMNT 70
Interior Floo	14	CARPET 30
Air Condition	03	CENTRAL 100
Heating Type	04	AIR DUCTED 100
Bedrooms		3 100
Bathrooms		2 100
Frame	02	WOOD FRAME 100
Stories	1.	1. 100
Units		0 100
Occupancy	00	NONE 100
Quality	01	Quality Level 01
DOR CODE	0100	SINGLE FAMILY
MAP NUM		MKT AREA 04
NEIGHBORHOOD/LOC	4086.0100	

AREA TYPE	TOTAL GROSS AREA	PCT OF BASE	TOT ADJ AREA	SUBAREA MARKET VALUE
BAS	1,627	100	1,627	198,038
FGR	483	55	266	32,378
FOP	80	30	24	2,921
FSP	120	40	48	5,843
TOTALS	2,310		1,965	239,180

MARKET ADJUSTMENTS

TYPE	MDL	EFF. AREA	TOT ADJ PTS	EFF. BASE RATE	REPL. COST NEW	AYB	EYB	ECON	FNCT		NORM	% COND
0900	01	1,965	97.3728	121.72	239,180	2022	2022	0	0	0	0.00	100.00

1 SNGL FAM – 100% - 2023 Heated Area: 1627 HX Base Yr 2023

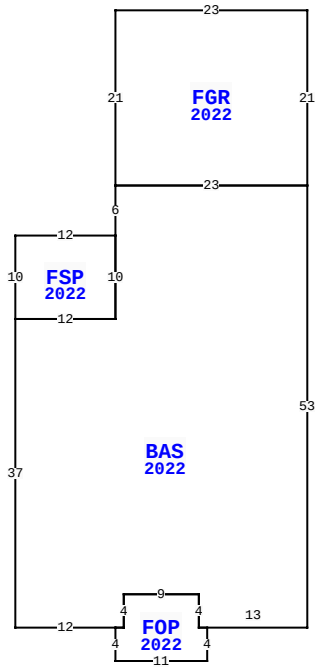

746 LOBLOLLY LN, YULEE

BLD DATE	03/21/2023 NW	LGL DATE	
XF DATE		LAND DATE	
INC DATE		AG DATE	

VALUATION SUMMARY

VALUATION BY		STANDARD
Tax Group: 4	Tax Dist:	
BUILDING MARKET VALUE		239,180
TOTAL MARKET OB/XF VALUE		4,300
TOTAL LAND VALUE - MARKET		60,000
TOTAL MARKET VALUE		303,480
SOH/AGL Deduction		3,222
ASSESSED VALUE		300,258
TOTAL EXEMPTION VALUE	HX HB	50,000
BASE TAXABLE VALUE		250,258
TOTAL JUST VALUE		303,480
NCON VALUE		0
INCOME VALUE		
PREVIOUS YEAR MKT VALUE		291,513

PERMIT NUM	DESCRIPTION	AMT	ISSUED
22014434	CO ISSUED	0	09/22/2022
22000322	NEW CONSTR	276,927	01/06/2022

SALES DATA

OFF RECORD Number	DATE	TYPE INST	Q U	V I	RSN CD	SALE PRICE
2593/0949	9/27/2022	SW	Q	I	01	365,900
GRANTOR: MATTAMY JACKSONVILLE						
GRANTEE: MATNER JAMIE M & RI						
2500/1705	9/28/2021	SW	Q	V	05	981,000
GRANTOR: WILDLIGHT LLC						
GRANTEE: MATTAMY JACKSONVILL						

BUILDING NOTES

BUILDING DIMENSIONS

FGR=[YR=2022] W23 S21 BAS=[YR=2022] S6 FSP=[YR=2022] W12 S10 E12 N10$ S10 W12 S37 E12 FOP=[YR=2022] S4 E11 N4 W1 N4 W9 S4 W1$ E1 N4 E9 S4 E13 N53 W23$ E23 N21$.

EXTRA FEATURES

LN	OB/XF CODE	DESCRIPTION	BLD	CAP	L	W	UNITS	UT	Adj R	ADJ UNIT PRICE	ORIG COND	YEAR ON	YEAR ACTUAL	Q	% COND	OB/XF MKT VALUE	NOTES
1	0811	CONCRETE B	0	100	0	0	827.00	SF	5.20	5.20	100	2022	2022	3	100	4,300	

LAND DESCRIPTION

TOTAL OB/XF 4,300

LN	USE CODE	CLS	LAND USE DESCRIPTION	CAP	RD	LOC ZONE	FRONT	DEPTH	TOT LND UTS	UNIT TYPE	DT	DPTH FACT	% COND	TOT ADJ	UNIT PRICE	ADJ UNIT PRICE	LAND VALUE	OTHER ADJUSTMENTS AND NOTES	YEAR	DENSITY	DECL	FRZ	YR	CONSRV
1	000100	C	SFR	100		PD -	E 0.00	0.00	1.00	LT		1.00	1.00	1.00	60,000.00	60,000.00	60,000							

REVIEW DATE 12/16/2022 BY NW Total Acres: 0.00 Total Land Value: 60,000 Market: 0 Agricultural: 0 Common: 60,000 PRINTED 08/06/2024 BY SYS