LOT 84
ESMT PT OR 2176/356
EAST NASSAU-WILDLIGHT PHASE 1A

MCHUGH MARK D
214 PONDER CIR
YULEE, FL 32097

2024

44-2N-27-1000-0084-0000

NASSAU COUNTY PROPERTY

BUILDING CHARACTERISTICS

ELEMENT	CD	CONSTRUCTION
Exterior Wall	10	ABOVE AVG 100
Roof Structur	03	GABLE/HIP 100
Roof Cover	03	COMP SHNGL 100
Interior Wall	05	DRYWALL 70
Interior Wall	06	CUST PANEL 30
Interior Floo	11	CLAY TILE 80
Interior Floo	14	CARPET 20
Air Condition	03	CENTRAL 100
Heating Type	04	AIR DUCTED 100
Bedrooms		3 100
Bathrooms		3.5 100
Frame	02	WOOD FRAME 100
Stories	2.	2. 100
Units		0 100
Occupancy	00	NONE 100
Quality	03	Quality Level 03

DOR CODE	0100	SINGLE FAMILY	
MAP NUM		MKT AREA	04
NEIGHBORHOOD/LOC	4086.00		

AREA TYPE	TOTAL GROSS AREA	PCT OF BASE	TOT ADJ AREA	SUBAREA MARKET VALUE
BAS	1,942	100	1,942	265,393
FDG	506	60	304	41,544
FOP	118	30	35	4,783
FOP	200	30	60	8,199
FOP	224	30	67	9,157
FUS	1,127	100	1,127	154,015
STR	64	10	6	820
TOTALS	4,181		3,541	483,912

MARKET ADJUSTMENTS

TYPE	MDL	EFF. AREA	TOT ADJ PTS	EFF. BASE RATE	REPL. COST NEW	AYB	EYB	ECON	FNCT		NORM	% COND
0900	01	3,541	110.4300	138.04	488,800	2020	2020	0	0	0	1.00	99.00

1 SNGL FAM – 0% - 0 Heated Area: 3069 HX Base Yr

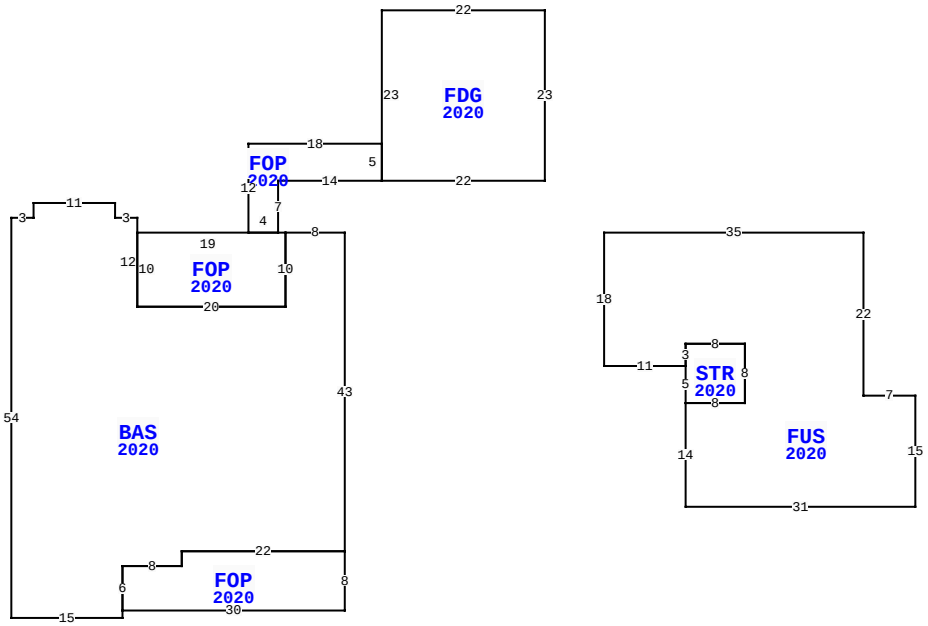

214 PONDER CIR, YULEE

BLD DATE	04/04/2022 NW	LGL DATE	
XF DATE		LAND DATE	
INC DATE		AG DATE	

VALUATION SUMMARY

VALUATION BY	STANDARD
Tax Group: 4	Tax Dist:
BUILDING MARKET VALUE	483,912
TOTAL MARKET OB/XF VALUE	7,864
TOTAL LAND VALUE - MARKET	100,000
TOTAL MARKET VALUE	591,776
SOH/AGL Deduction	71,004
ASSESSED VALUE	520,772
TOTAL EXEMPTION VALUE	0
BASE TAXABLE VALUE	520,772
TOTAL JUST VALUE	591,776
NCON VALUE	0
INCOME VALUE	
PREVIOUS YEAR MKT VALUE	569,909

PERMIT NUM	DESCRIPTION	AMT	ISSUED
20003100	CO ISSUED	0	04/09/2020
1911506	DREAMFINDERS	382,027	11/04/2019

SALES DATA

OFF RECORD Number	DATE	TYPE INST	Q / U	V / I	RSN CD	SALE PRICE
2354/0494	4/13/2020	WD	Q	I	01	602,600
GRANTOR: DREAM FINDERS HOMES L						
GRANTEE: MCHUGH MARK D						
2203/1180	6/13/2018	QC	U	V	11	100
GRANTOR: RAYDIENT LLC D/B/A RA						
GRANTEE: WILDLIGHT LLC ET AL						

BUILDING NOTES

BUILDING DIMENSIONS

BAS=[YR=2020] W8 FOP=[YR=2020] W1 FOP=[YR=2020] N7 E14 FDG=[YR=2020] E22 N23 W22 S23$ N5 W18 S12 E4$ W19 S10 E20 N10$ S10 W20 N12 W3 N2 W11 S2 W3 S54 E15 N1 FOP=[YR=2020] E30 N8 W22 S2 W8 S6$ N6 E8 N2 E22 N43$ PTR=E35 FUS=[YR=2020] S18 E11 STR=[YR=2020] S5 E8 N8 W8 S3$ N3 E8 S8 W8 S14 E31 N15 W7 N22 W35$ W35$.

EXTRA FEATURES

LN	OB/XF CODE	DESCRIPTION	BLD	CAP	L	W	UNITS	UT	Adj R	ADJ UNIT PRICE	ORIG COND	YEAR ON	YEAR ACTUAL	Q	% COND	OB/XF MKT VALUE	NOTES
1	0810	CONCRETE A	0	0	0	0	1,222.00	SF	6.50	6.50	100	2020	2020	3	99	7,864	

LAND DESCRIPTION

TOTAL OB/XF 7,864

LN	USE CODE	CLS	LAND USE DESCRIPTION	CAP	RD	LOC ZONE	FRONT	DEPTH	TOT LND UTS	UNIT TYPE	DT	DPTH FACT	% COND	TOT ADJ	UNIT PRICE	ADJ UNIT PRICE	LAND VALUE	OTHER ADJUSTMENTS AND NOTES	YEAR	DENSITY	DECL	FRZ	YR	CONSRV
1	000100	C	SFR	0		PD -	E 0.00	0.00	1.00	LT		1.00	1.00	1.00	100,000.00	100,000.00	100,000							

REVIEW DATE 09/17/2020 BY NW Total Acres: 0.00 Total Land Value: 100,000 Market: 0 Agricultural: 0 Common: 100,000 PRINTED 08/06/2024 BY SYS