LOT 83
ESMT PT OR 2176/356
EAST NASSAU-WILDLIGHT PHASE 1A

HOARE DENNIS L & SUSAN K
218 PONDER CIRCLE
YULEE, FL 32097

2024

44-2N-27-1000-0083-0000

NASSAU COUNTY PROPERTY

BUILDING CHARACTERISTICS

ELEMENT	CD	CONSTRUCTION
Exterior Wall	31	HARDIE BRD 100
Roof Structur	03	GABLE/HIP 100
Roof Cover	03	COMP SHNGL 100
Interior Wall	05	DRYWALL 100
Interior Floo	12	HARDWOOD 60
Interior Floo	14	CARPET 40
Air Condition	03	CENTRAL 100
Heating Type	04	AIR DUCTED 100
Bedrooms		4 100
Bathrooms		3 100
Frame	02	WOOD FRAME 100
Stories	2.	2. 100
Units		0 100
Occupancy	00	NONE 100
Quality	03	Quality Level 03
DOR CODE	0100	SINGLE FAMILY
MAP NUM		MKT AREA 04
NEIGHBORHOOD/LOC	4086.00	

AREA TYPE	TOTAL GROSS AREA	PCT OF BASE	TOT ADJ AREA	SUBAREA MARKET VALUE
BAL	192	15	29	3,622
BAS	2,151	100	2,151	268,617
FGR	744	55	409	51,076
FOP	200	30	60	7,493
FSP	330	40	132	16,484
FUS	796	100	796	99,404
PTO	180	5	9	1,124
STP	12	10	1	125
STR	80	10	8	999
TOTALS	4,685		3,595	448,944

MARKET ADJUSTMENTS

TYPE	MDL	EFF. AREA	TOT ADJ PTS	EFF. BASE RATE	REPL. COST NEW	AYB	EYB	ECON	FNCT		NORM	% COND
0900	01	3,595	99.9000	124.88	448,944	2022	2022	0	0	0	0.00	100.00

1 SNGL FAM – 100% - 2023 Heated Area: 2947 HX Base Yr 2023

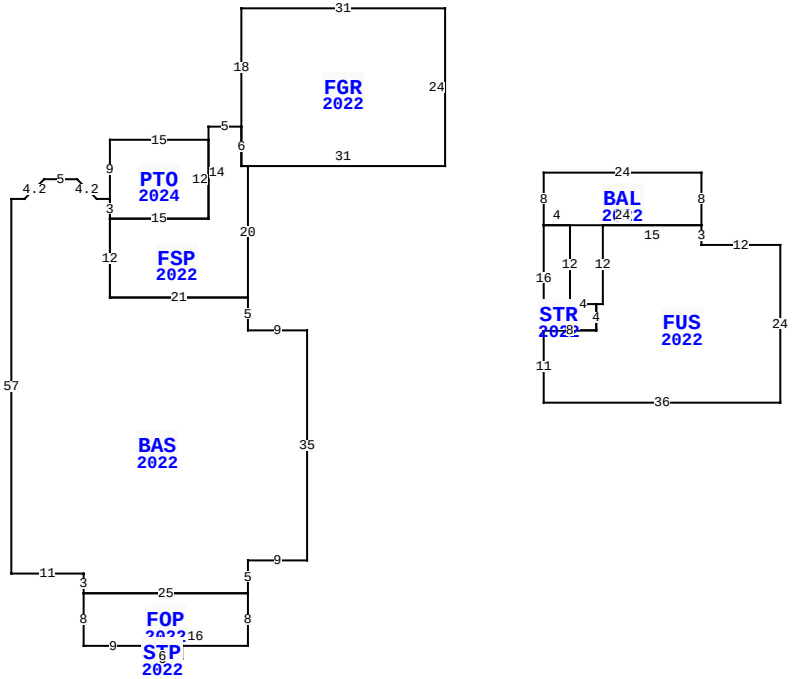

218 PONDER CIR, YULEE

BLD DATE		LGL DATE	
XF DATE		LAND DATE	
INC DATE		AG DATE	

VALUATION SUMMARY

VALUATION BY		STANDARD
Tax Group: 4	Tax Dist:	
BUILDING MARKET VALUE		448,944
TOTAL MARKET OB/XF VALUE		9,606
TOTAL LAND VALUE - MARKET		100,000
TOTAL MARKET VALUE		558,550
SOH/AGL Deduction		6,368
ASSESSED VALUE		552,182
TOTAL EXEMPTION VALUE	HX HB	50,000
BASE TAXABLE VALUE		502,182
TOTAL JUST VALUE		558,550
NCON VALUE		8,396
INCOME VALUE		
PREVIOUS YEAR MKT VALUE		527,948

PERMIT NUM	DESCRIPTION	AMT	ISSUED
230003219	SCRN ENCL 180 SQF	5,983	03/10/2023
22018862	CO ISSUED	0	12/28/2022
21026294	NEW CONSTR	502,655	11/19/2021

SALES DATA

OFF RECORD Number	DATE	TYPE INST	Q U	V I	RSN CD	SALE PRICE
2611/0156	12/30/2022	SW	Q	I	02	672,300
GRANTOR: DOSTIE HOMES LLC						
GRANTEE: HOARE DENNIS L & SU						
2261/0404	3/07/2019	SW	Q	V	05	341,500
GRANTOR: WILDLIGHT LLC						
GRANTEE: DOSTIE HOMES LLC						

BUILDING NOTES

EXTRA FEATURES

LN	OB/XF CODE	DESCRIPTION	BLD	CAP	L	W	UNITS	UT	Adj R	ADJ UNIT PRICE	ORIG COND	YEAR ON	YEAR ACTUAL	Q	% COND	OB/XF MKT VALUE	NOTES
1	0812	CONCRETE C	0	100	0	0	1,614.00	SF	4.00	4.00	100	2022	2022	3	100	6,456	
2	0911	SCRN RM A	0	100	0	0	180.00	SF	17.50	17.50	100	2024	2023		100	3,150	

BUILDING DIMENSIONS

BAS=[YR=2022;ORIG=-51,32] N3 W2 U3L3 W5 D3L3 W2 S57 E11 S3 E25 N5 E9 N35 W9 N5 W21 N12 $
FUS=[YR=2022;ORIG=39,33] S3 E12 S24 W36 N11 E8 N4 E1 N12 E15 $
FGR=[YR=2022;ORIG=0,0] W31 S18 S6 E31 N24 $
PTR=[ORIG=0,0] E15 S25 W15 N25 $
FSP=[YR=2022;ORIG=-31,18] W5 S14 W15 S12 E21 N20 W1 N6 $
FOP=[YR=2022;ORIG=-55,89] S8 E9 E16 N8 W25 $
BAL=[YR=2022;ORIG=15,25] E24 S8 W24 N8 $
STR=[YR=2022;ORIG=15,49] N16 E4 S12 E4 S4 W8 $
STP=[YR=2022;ORIG=-46,97] S2 E6 N2 W6 $
PTO=[YR=2024;ORIG=-51,20] E15 S12 W15 N3 N9 $

LAND DESCRIPTION

TOTAL OB/XF 9,606

LN	USE CODE	CLS	LAND USE DESCRIPTION	CAP	RD	LOC ZONE	FRONT	DEPTH	TOT LND UTS	UNIT TYPE	DT	DPTH FACT	% COND	TOT ADJ	UNIT PRICE	ADJ UNIT PRICE	LAND VALUE	OTHER ADJUSTMENTS AND NOTES	YEAR	DENSITY	DECL	FRZ	YR	CONSRV
1	000100	C	SFR	100		PD -	E 0.00	0.00	1.00	LT		1.00	1.00	1.00	100,000.00	100,000.00	100,000							

REVIEW DATE 01/30/2024 BY WW Total Acres: 0.00 Total Land Value: 100,000 Market: 0 Agricultural: 0 Common: 100,000 PRINTED 08/06/2024 BY SYS