LOT 59
ESMT PT OR 2176/356
EAST NASSAU-WILDLIGHT PHASE 1A

BEACH JAMES E JR & RACHEL J
245 MORNING RAY WAY
YULEE, FL 32097

2024

44-2N-27-1000-0059-0000

NASSAU COUNTY PROPERTY

BUILDING CHARACTERISTICS

ELEMENT	CD	CONSTRUCTION
Exterior Wall	10	ABOVE AVG 100
Roof Structur	03	GABLE/HIP 100
Roof Cover	03	COMP SHNGL 100
Interior Wall	05	DRYWALL 100
Interior Floo	13	LVT/LAMNT 50
Interior Floo	14	CARPET 50
Air Condition	03	CENTRAL 100
Heating Type	04	AIR DUCTED 100
Bedrooms		4 100
Bathrooms		3 100
Frame	02	WOOD FRAME 100
Stories	2.	2. 100
Units		0 100
Occupancy	00	NONE 100
Quality	03	Quality Level 03

DOR CODE 0100 SINGLE FAMILY
MAP NUM | MKT AREA 04
NEIGHBORHOOD/LOC 4086.00

AREA TYPE	TOTAL GROSS AREA	PCT OF BASE	TOT ADJ AREA	SUBAREA MARKET VALUE
BAS	2,144	100	2,144	268,504
FDG	484	60	290	36,318
FOP	176	30	53	6,638
FOP	192	30	58	7,264
FST	249	55	137	17,158
FUS	538	100	538	67,376
STR	76	10	8	1,002
TOTALS	3,859		3,228	404,259

MARKET ADJUSTMENTS

TYPE	MDL	EFF. AREA	TOT ADJ PTS	EFF. BASE RATE	REPL. COST NEW	AYB	EYB	ECON	FNCT		NORM	% COND
0900	01	3,228	101.2000	126.50	408,342	2020	2020	0	0	0	1.00	99.00

1 SNGL FAM – 100% - 2021 Heated Area: 2682 HX Base Yr 2021

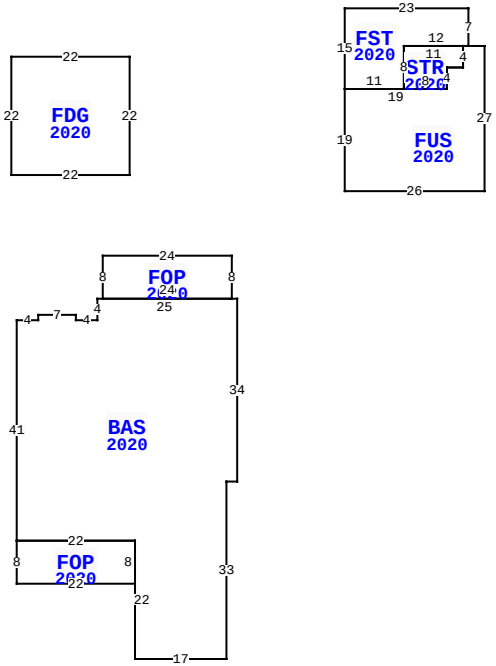

245 MORNING RAY WAY, YULEE

BLD DATE	04/04/2022 NW	LGL DATE	
XF DATE		LAND DATE	
INC DATE		AG DATE	

VALUATION SUMMARY

VALUATION BY		STANDARD
Tax Group: 4	Tax Dist:	
BUILDING MARKET VALUE		404,259
TOTAL MARKET OB/XF VALUE		5,972
TOTAL LAND VALUE - MARKET		60,000
TOTAL MARKET VALUE		470,231
SOH/AGL Deduction		112,997
ASSESSED VALUE		357,234
TOTAL EXEMPTION VALUE	HX HB	50,000
BASE TAXABLE VALUE		307,234
TOTAL JUST VALUE		470,231
NCON VALUE		0
INCOME VALUE		
PREVIOUS YEAR MKT VALUE		451,973

PERMIT NUM	DESCRIPTION	AMT	ISSUED
20001282	CO ISSUED	0	02/12/2020
19007555	GARAGE	23,195	07/16/2019
19003840	NEW CONSTR	360,993	05/07/2019

SALES DATA

OFF RECORD Number	DATE	TYPE INST	Q U	V I	RSN CD	SALE PRICE
2399/0502	10/07/2020	WD	Q	I	01	385,000
GRANTOR: DREAM FINDERS HOMES L						
GRANTEE: BEACH JAMES E JR &						
2236/0709	11/09/2018	SW	Q	V	05	249,000
GRANTOR: WILDLIGHT LLC						
GRANTEE: DREAM FINDERS HOMES						

BUILDING NOTES

EXTRA FEATURES

LN	OB/XF CODE	DESCRIPTION	BLD	CAP	L	W	UNITS	UT	Adj R	ADJ UNIT PRICE	ORIG COND	YEAR ON	YEAR ACTUAL	Q	% COND	OB/XF MKT VALUE	NOTES
1	0812	CONCRETE C	0	100	0	0	1,508.00	SF	4.00	4.00	100	2020	2020	3	99	5,972	

BUILDING DIMENSIONS

```
BAS=[YR=2020;ORIG=0,0] W1 W25 S4 W4 N1 W7 S1 W4 S41 E22 S22
E17 N33 E2 N34 $
FUS=[YR=2020;ORIG=20,-20] E26 N27 W3 W1 S4 W3 S4 W19 S19 $
FDG=[YR=2020;ORIG=-42,-45] S22 E22 N22 W22 $
FST=[YR=2020;ORIG=43,-47] N7 W23 S15 E11 N8 E12 $
FOP=[YR=2020;ORIG=-1,0] N8 W24 S8 E24 $
FOP=[YR=2020;ORIG=-41,45] S8 E22 N8 W22 $
STR=[YR=2020;ORIG=31,-39] E8 N4 E3 N4 W11 S8 $
PTR=[ORIG=0,0] E20 W20 $
PTR=[ORIG=20,0] N20 S20 $
.
```

LAND DESCRIPTION

TOTAL OB/XF 5,972

LN	USE CODE	CLS	LAND USE DESCRIPTION	CAP	RD	LOC ZONE	FRONT	DEPTH	TOT LND UTS	UNIT TYPE	DT	DPTH FACT	% COND	TOT ADJ	UNIT PRICE	ADJ UNIT PRICE	LAND VALUE	OTHER ADJUSTMENTS AND NOTES	YEAR	DENSITY	DECL	FRZ	YR	CONSRV
1	000100	C	SFR	100		PD -	E 0.00	0.00	1.00	LT		1.00	1.00	1.00	60,000.00	60,000.00	60,000							

REVIEW DATE 03/18/2020 BY NW Total Acres: 0.00 Total Land Value: 60,000 Market: 0 Agricultural: 0 Common: 60,000 PRINTED 08/06/2024 BY SYS