PT E WATERMAN MILL GRANT
SEC 44-2N-27E IN OR 2307/1054
ESMT IN OR 2503-1432, OR 2528-63

LOW COUNTRY LAND TRUST/PROPERTY MANAGMENT SUPPORT
1 SLEIMAN PKWY STE 270
JACKSONVILLE, FL 32216

2024

44-2N-27-0000-0001-0410

NASSAU COUNTY PROPERTY

BUILDING CHARACTERISTICS

ELEMENT	CD	CONSTRUCTION
Exterior Wall	15	CONC BLOCK 70
Exterior Wall	17	CB STUCCO 30
Roof Structur	09	RIDGE FRME 100
Roof Cover	04	BUILT-UP 100
Interior Wall	08	DECORATIVE 60
Interior Wall	05	DRYWALL 40
Interior Floo	10	TERRAZZO 80
Interior Floo	11	CLAY TILE 20
Ceiling	04	NONE 100
Air Condition	07	ENG PACKGE 100
Heating Type	09	ENG F AIR 100
Fixtures		75 100
Frame	03	MASONRY 100
Story Height		23 100
RMS		19 100
Stories	1.5	1.5 100
Units		0 100
Occupancy	00	NONE 100
Quality	03	Quality Level 03
DOR CODE	1600	COMMUNITY SHOPPING
MAP NUM		MKT AREA 04
NEIGHBORHOOD/LOC	4053.00	

AREA TYPE	TOTAL GROSS AREA	PCT OF BASE	TOT ADJ AREA	SUBAREA MARKET VALUE
BAS	46,931	100	46,931	7,445,246
CAN	442	30	133	21,099
CAN	2,149	30	645	102,325
FUS	2,723	100	2,723	431,983
PTO	56	5	3	476
PTO	210	5	10	1,587
SFB	66	80	53	8,408
SFB	494	80	395	62,664
SFB	1,349	80	1,079	171,176
STR	15	10	2	318
TOTALS	57,016		52,361	8,306,675

MARKET ADJUSTMENTS

TYPE	MDL	EFF. AREA	TOT ADJ PTS	EFF. BASE RATE	REPL. COST NEW	AYB	EYB	ECON	FNCT		NORM	% COND
1401	04	52,361	129.5040	161.88	8,476,199	2022	2022	0	0	0	2.00	98.00

1 SUPER MRKT - 0% - 2023 Heated Area: 51181 HX Base Yr

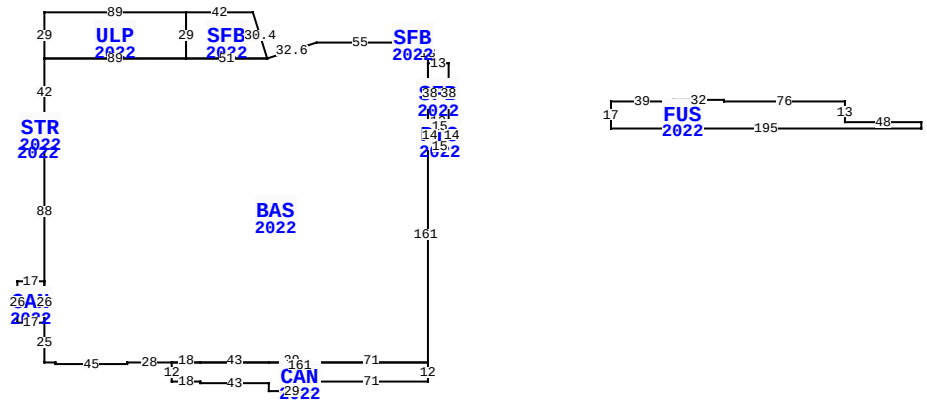

** This building has 11 Sub-Areas

WILLIAM BURGESS BLVD, YULEE

BLD DATE	07/25/2024 REA	LGL DATE	
XF DATE		LAND DATE	06/17/2020 MF
INC DATE		AG DATE	

VALUATION SUMMARY

VALUATION BY	STANDARD
Tax Group: 4	Tax Dist:
BUILDING MARKET VALUE	11,896,898
TOTAL MARKET OB/XF VALUE	1,020,405
TOTAL LAND VALUE - MARKET	3,640,000
TOTAL MARKET VALUE	16,557,303
SOH/AGL Deduction	0
ASSESSED VALUE	16,557,303
TOTAL EXEMPTION VALUE	0
BASE TAXABLE VALUE	16,557,303
TOTAL JUST VALUE	16,557,303
NCON VALUE	17,754
INCOME VALUE	
PREVIOUS YEAR MKT VALUE	18,374,379

PERMIT NUM	DESCRIPTION	AMT	ISSUED
B240005385	THICKENED SLAB, M	12,000	05/03/2024
B240005383	THICKENED SLAB, M	12,000	05/03/2024
B240003694	INTERIOR BUILDOUT	459,093	04/02/2024
230007270	CO'D FOR SERENE T		01/25/2024
SU240000770	FLUSH MOUNTED LED	16,259	01/22/2024
B230014668	75980 WB- 5890 T	844,861	11/14/2023

SALES DATA

OFF RECORD Number	DATE	TYPE INST	Q / U	V / I	RSN CD	SALE PRICE
2307/1054	9/25/2019	SW	Q	V	01	4,215,800
GRANTOR: WILDLIGHT LLC						
GRANTEE: LOW COUNTRY LAND TR						
2307/1025	9/19/2019	QC	U	V	11	100
GRANTOR: RAYONIER FOREST RESOU						
GRANTEE: WILDLIGHT LLC						

BUILDING NOTES

EXTRA FEATURES

LN	OB/XF CODE	DESCRIPTION	BLD	CAP	L	W	UNITS	UT	Adj R	ADJ UNIT PRICE	ORIG COND	YEAR ON	YEAR ACTUAL	Q	% COND	OB/XF MKT VALUE	NOTES
1	0803	ASPHALT C	0	0	0	0	250,034.00	SF	2.00	2.00	100	2022	2022	3	90	450,061	
2	0812	CONCRETE C	0	0	0	0	25,265.00	SF	4.00	4.00	100	2022	2022	3	100	101,060	
3	0400	CONC CURB	0	0	0	0	6,447.00	LF	15.00	15.00	100	2022	2022	3	100	96,705	
4	1123	CB 8"	0	0	90	0	90.00	SF	6.15	6.15	100	2022	2022	3	100	554	
5	0972	ST LGHT UN	0	0	0	0	48.00	UT	2,530.00	2,530.00	100	2022	2022	3	99	120,226	
6	0975	ST LT/ARM	0	0	0	0	23.00	UT	500.00	500.00	100	2022	2022	3	99	11,385	
7	0966	FIRE SPRNK	0	0	0	0	51,563.00	SF	3.00	3.00	100	2022	2022	3	100	154,689	
8	0966	FIRE SPRNK	0	0	0	0	11,775.00	SF	3.00	3.00	100	2022	2022	3	100	35,325	
9	0966	FIRE SPRNK	0	0	0	0	8,400.00	SF	3.00	3.00	100	2022	2022	3	100	25,200	
10	0966	FIRE SPRNK	0	0	0	0	8,400.00	SF	3.00	3.00	100	2022	2022	3	100	25,200	

BUILDING DIMENSIONS

BAS=[YR=2022;ORIG=200,10] W4 W11 W55 D10L31 W51 W89 S42 S3 S7 S88 S26 S25 E7 S1 E45 N1 E28 E18 E43 E29 E71 N161 N27 N13 $
ULP=[YR=2022;ORIG=-41,-9] E89 S29 W89 N29 $
CAN=[YR=2022;ORIG=200,211] S12 W71 S6 W29 N5 W43 N1 W18 N12 E161 $
SFB=[YR=2022;ORIG=48,-9] S29 E51 U29L9 W42 $
CAN=[YR=2022;ORIG=-41,186] W17 N26 E17 S26 $
SFB=[YR=2022;ORIG=200,23] E13 S38 W13 N38 $
SFB=[YR=2022;ORIG=185,4] E11 S6 W11 N6 $
PTO=[YR=2022;ORIG=-49,65] E8 S7 W8 N7 $
STR=[YR=2022;ORIG=-41,62] W5 S3 E5 N3 $
PTO=[YR=2022;ORIG=200,61] E15 S14 W15 N14 $

LAND DESCRIPTION

TOTAL OB/XF 1,020,405

LN	USE CODE	CLS	LAND USE DESCRIPTION	CAP	RD	LOC ZONE	FRONT	DEPTH	TOT LND UTS	UNIT TYPE	DT	DPTH FACT	% COND	TOT ADJ	UNIT PRICE	ADJ UNIT PRICE	LAND VALUE	OTHER ADJUSTMENTS AND NOTES	YEAR	DENSITY	DECL	FRZ	YR	CONSRV
1	001600	C	SH CTR COM	0		PD -	E 0.00	0.00	700,000.00	SF		1.00	1.00	0.65	8.00	5.20	3,640,000							

REVIEW DATE 07/12/2023 BY HS Total Acres: 0.00 Total Land Value: 3,640,000 Market: 0 Agricultural: 0 Common: 3,640,000 PRINTED 08/06/2024 BY SYS

PT E WATERMAN MILL GRANT
SEC 44-2N-27E IN OR 2307/1054
ESMT IN OR 2503-1432, OR 2528-63

LOW COUNTRY LAND TRUST/PROPERTY MANAGMENT SUPPORT
1 SLEIMAN PKWY STE 270
JACKSONVILLE, FL 32216

2024

44-2N-27-0000-0001-0410

NASSAU COUNTY PROPERTY

BUILDING CHARACTERISTICS

ELEMENT	CD	CONSTRUCTION
Exterior Wall	10	ABOVE AVG 50
Exterior Wall	15	CONC BLOCK 50
Roof Structur	09	RIDGE FRME 100
Roof Cover	04	BUILT-UP 100
Interior Wall	05	DRYWALL 100
Interior Floo	03	CONC FINSH 100
Ceiling	04	NONE 100
Air Condition	04	ROOF TOP 100
Heating Type	04	AIR DUCTED 100
Fixtures		20 100
Frame	03	MASONRY 100
Story Height		18 100
RMS		12 100
Stories	1.	1. 100
Units		0 100
Occupancy	00	NONE 100
Quality	03	Quality Level 03

DOR CODE 1600 COMMUNITY SHOPPING
MAP NUM | MKT AREA 04
NEIGHBORHOOD/LOC 4053.00

AREA TYPE	TOTAL GROSS AREA	PCT OF BASE	TOT ADJ AREA	SUBAREA MARKET VALUE
BAS	11,775	100	11,775	1,393,164
CAN	80	30	24	2,840
CAN	85	30	26	3,076
CAN	180	30	54	6,389
CAN	222	30	67	7,927
CAN	528	30	158	18,694
FST	84	50	42	4,970
TOTALS	12,954		12,146	1,437,059

MARKET ADJUSTMENTS

TYPE	MDL	EFF. AREA	TOT ADJ PTS	EFF. BASE RATE	REPL. COST NEW	AYB	EYB	ECON	FNCT		NORM	% COND
1601	04	12,146	106.1340	120.73	1,466,387	2022	2022	0	0	0	2.00	98.00

2 COMNTYSHOP – 0% - 2023 Heated Area: 11775 HX Base Yr

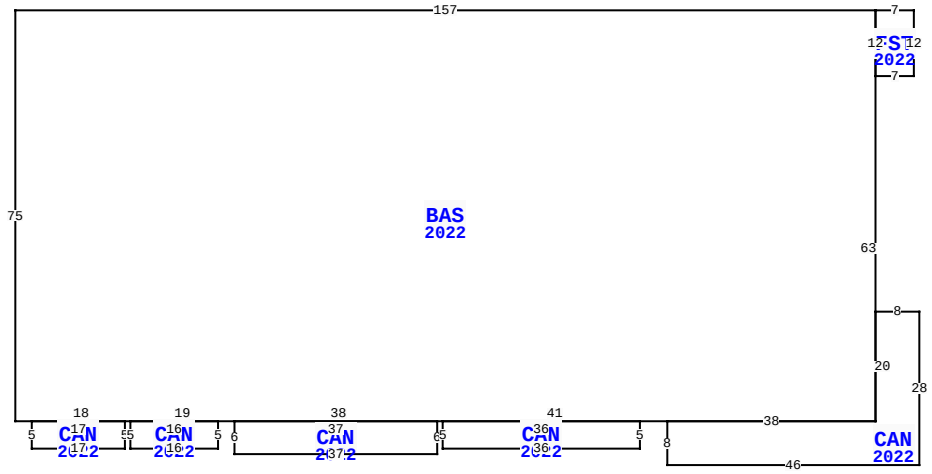

WILLIAM BURGESS BLVD, YULEE

BLD DATE	07/25/2024 REA	LGL DATE	
XF DATE		LAND DATE	06/17/2020 MF
INC DATE		AG DATE	

NASSAU COUNTY PROPERTY — VALUATION SUMMARY

VALUATION BY	STANDARD
Tax Group: 4	Tax Dist:
BUILDING MARKET VALUE	11,896,898
TOTAL MARKET OB/XF VALUE	1,020,405
TOTAL LAND VALUE - MARKET	3,640,000
TOTAL MARKET VALUE	16,557,303
SOH/AGL Deduction	0
ASSESSED VALUE	16,557,303
TOTAL EXEMPTION VALUE	0
BASE TAXABLE VALUE	16,557,303
TOTAL JUST VALUE	16,557,303
NCON VALUE	17,754
INCOME VALUE	
PREVIOUS YEAR MKT VALUE	18,374,379

PERMIT NUM	DESCRIPTION	AMT	ISSUED
B230014665	75990 EB- 5732 TS	788,321	11/14/2023
230013724	SERENE TANNING UN	263,336	10/25/2023
230006630	AT&T- 76020 UNIT	282,909	05/22/2023
B230002548	FLAT METAL CANOPY	55,600	02/24/2023
22009527	NEW CONSTR	91,800	11/15/2022
22016715	NAIL SALON	60,600	11/08/2022

SALES DATA

OFF RECORD Number	DATE	TYPE INST	Q U	V I	RSN CD	SALE PRICE
2307/1054	9/25/2019	SW	Q	V	01	4,215,800
GRANTOR: WILDLIGHT LLC						
GRANTEE: LOW COUNTRY LAND TR						
2307/1025	9/19/2019	QC	U	V	11	100
GRANTOR: RAYONIER FOREST RESOU						
GRANTEE: WILDLIGHT LLC						

BUILDING NOTES

BUILDING DIMENSIONS

BAS=[YR=2022] W157 S75 E3 CAN=[YR=2022] S5 E17 N5 W17$ E18 CAN=[YR=2022] S5 E16 N5 W16$ E19 CAN=[YR=2022] S6 E37 N6 W37$ E38 CAN=[YR=2022] S5 E36 N5 W36$ E41 CAN=[YR=2022] S8 E46 N28 W8 S20 W38$ E38 N63 FST=[YR=2022] E7 N12 W7 S12$ N12$.

EXTRA FEATURES

LN	OB/XF CODE	DESCRIPTION	BLD	CAP	L	W	UNITS	UT	Adj R	ADJ UNIT PRICE	ORIG COND	YEAR ON	YEAR ACTUAL	Q	% COND	OB/XF MKT VALUE	NOTES

LAND DESCRIPTION

TOTAL OB/XF 0

LN	USE CODE	CLS	LAND USE DESCRIPTION	CAP	RD	LOC ZONE	FRONT	DEPTH	TOT LND UTS	UNIT TYPE	DT	DPTH FACT	% COND	TOT ADJ	UNIT PRICE	ADJ UNIT PRICE	LAND VALUE	OTHER ADJUSTMENTS AND NOTES	YEAR	DENSITY	DECL	FRZ	YR	CONSRV

REVIEW DATE 07/12/2023 BY HS Total Acres: 0.00 Total Land Value: 3,640,000 Market: 0 Agricultural: 0 Common: 3,640,000 PRINTED 08/06/2024 BY SYS

PT E WATERMAN MILL GRANT
SEC 44-2N-27E IN OR 2307/1054
ESMT IN OR 2503-1432, OR 2528-63

LOW COUNTRY LAND TRUST/PROPERTY MANAGMENT SUPPORT
1 SLEIMAN PKWY STE 270
JACKSONVILLE, FL 32216

2024

44-2N-27-0000-0001-0410

NASSAU COUNTY PROPERTY

BUILDING CHARACTERISTICS

ELEMENT	CD	CONSTRUCTION
Exterior Wall	10	ABOVE AVG 50
Exterior Wall	15	CONC BLOCK 50
Roof Structur	09	RIDGE FRME 100
Roof Cover	04	BUILT-UP 100
Interior Wall	05	DRYWALL 100
Interior Floo	03	CONC FINSH 100
Ceiling	04	NONE 100
Air Condition	04	ROOF TOP 100
Heating Type	04	AIR DUCTED 100
Fixtures		12 100
Frame	03	MASONRY 100
Story Height		18 100
RMS		8 100
Stories	1.	1. 100
Units		0 100
Occupancy	00	NONE 100
Quality	03	Quality Level 03
DOR CODE	1600	COMMUNITY SHOPPING
MAP NUM		MKT AREA 04
NEIGHBORHOOD/LOC	4053.00	

AREA TYPE	TOTAL GROSS AREA	PCT OF BASE	TOT ADJ AREA	SUBAREA MARKET VALUE
BAS	8,400	100	8,400	1,003,975
CAN	65	30	20	2,390
CAN	65	30	20	2,390
CAN	65	30	20	2,390
CAN	102	30	31	3,705
CAN	333	30	100	11,952
CAN	488	30	146	17,450
FST	77	50	38	4,541
TOTALS	9,595		8,775	1,048,795

MARKET ADJUSTMENTS

TYPE	MDL	EFF. AREA	TOT ADJ PTS	EFF. BASE RATE	REPL. COST NEW	AYB	EYB	ECON	FNCT		NORM	% COND
1601	04	8,775	107.2170	121.96	1,070,199	2022	2022	0	0	0	2.00	98.00

3 COMNTYSHOP - 0% - 2023 Heated Area: 8400 HX Base Yr

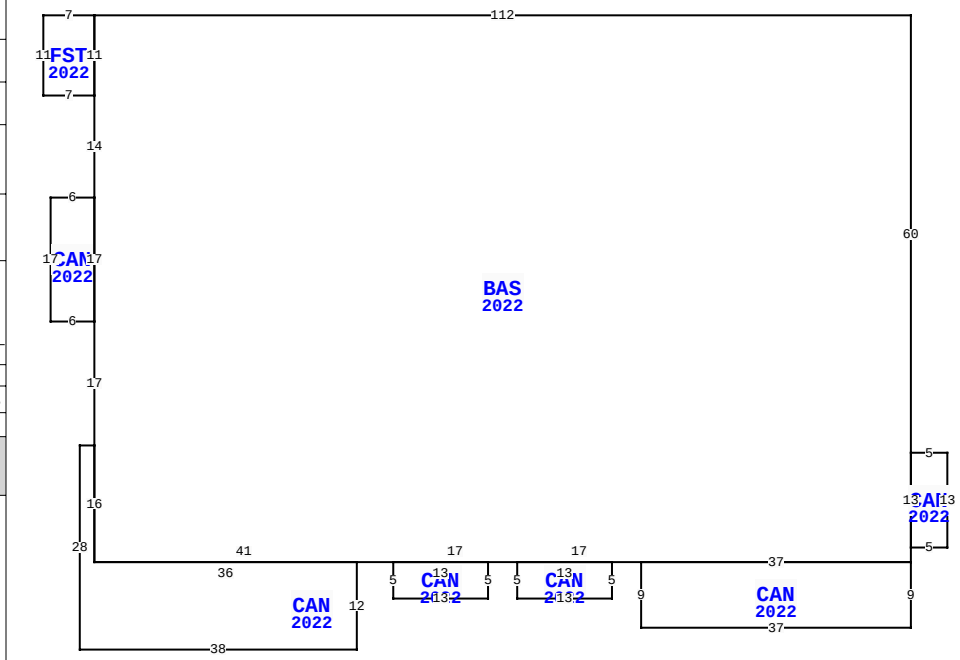

BLD DATE	07/25/2024 REA	LGL DATE	
XF DATE		LAND DATE	06/17/2020 MF
INC DATE		AG DATE	

WILLIAM BURGESS BLVD, YULEE

NASSAU COUNTY PROPERTY

VALUATION SUMMARY

VALUATION BY	STANDARD
Tax Group: 4	Tax Dist:
BUILDING MARKET VALUE	11,896,898
TOTAL MARKET OB/XF VALUE	1,020,405
TOTAL LAND VALUE - MARKET	3,640,000
TOTAL MARKET VALUE	16,557,303
SOH/AGL Deduction	0
ASSESSED VALUE	16,557,303
TOTAL EXEMPTION VALUE	0
BASE TAXABLE VALUE	16,557,303
TOTAL JUST VALUE	16,557,303
NCON VALUE	17,754
INCOME VALUE	
PREVIOUS YEAR MKT VALUE	18,374,379

PERMIT NUM	DESCRIPTION	AMT	ISSUED
22016661	UPS BLD OUT	75,000	11/07/2022
22013437	BLD OUT- 76000 UN	302,709	09/01/2022
22005494	BLD OUT- 76020 UN	299,712	08/16/2022
22011409	BLD OUT 76030-UNI	595,470	07/26/2022
22007982	BLD OUT 76020-UNI	276,377	05/23/2022
22007984	BLD OUT 76030-UNI	509,649	05/23/2022

SALES DATA

OFF RECORD Number	DATE	TYPE INST	Q / U	V / I	RSN CD	SALE PRICE
2307/1054	9/25/2019	SW	Q	V	01	4,215,800
GRANTOR: WILDLIGHT LLC						
GRANTEE: LOW COUNTRY LAND TR						
2307/1025	9/19/2019	QC	U	V	11	100
GRANTOR: RAYONIER FOREST RESOU						
GRANTEE: WILDLIGHT LLC						

BUILDING NOTES

BUILDING DIMENSIONS

BAS=[YR=2022;ORIG=0,0] W112 S11 S14 S17 S17 S16 E41 E17 E17 E37 N2 N13 N60 $
CAN=[YR=2022;ORIG=-112,59] W2 S28 E38 N12 W36 N16 $
CAN=[YR=2022;ORIG=-37,75] S9 E37 N9 W37 $
CAN=[YR=2022;ORIG=-112,25] W6 S17 E6 N17 $
FST=[YR=2022;ORIG=-112,0] W7 S11 E7 N11 $
CAN=[YR=2022;ORIG=-71,75] S5 E13 N5 W13 $
CAN=[YR=2022;ORIG=-54,75] S5 E13 N5 W13 $
CAN=[YR=2022;ORIG=0,73] E5 N13 W5 S13 $
.

EXTRA FEATURES

L N	OB/XF CODE	DESCRIPTION	BLD	CAP	L	W	UNITS	UT	Adj R	ADJ UNIT PRICE	ORIG COND	YEAR ON	YEAR ACTUAL	Q	% COND	OB/XF MKT VALUE	NOTES

LAND DESCRIPTION

TOTAL OB/XF 0

L N	USE CODE	CLS	LAND USE DESCRIPTION	CAP	R D	LOC ZONE	FRONT	DEPTH	TOT LND UTS	UNIT TYPE	D T	DPTH FACT	% COND	TOT ADJ	UNIT PRICE	ADJ UNIT PRICE	LAND VALUE	OTHER ADJUSTMENTS AND NOTES	YEAR	DENSITY	DECL	FRZ	YR	CONSRV

REVIEW DATE 07/12/2023 BY HS Total Acres: 0.00 Total Land Value: 3,640,000 Market: 0 Agricultural: 0 Common: 3,640,000 PRINTED 08/06/2024 BY SYS

PT E WATERMAN MILL GRANT
SEC 44-2N-27E IN OR 2307/1054
ESMT IN OR 2503-1432, OR 2528-63

LOW COUNTRY LAND TRUST/PROPERTY MANAGMENT SUPPORT
1 SLEIMAN PKWY STE 270
JACKSONVILLE, FL 32216

2024

44-2N-27-0000-0001-0410

NASSAU COUNTY PROPERTY

BUILDING CHARACTERISTICS

ELEMENT	CD	CONSTRUCTION
Exterior Wall	10	ABOVE AVG 50
Exterior Wall	15	CONC BLOCK 50
Roof Structur	09	RIDGE FRME 100
Roof Cover	04	BUILT-UP 100
Interior Wall	05	DRYWALL 100
Interior Floo	03	CONC FINSH 100
Ceiling	04	NONE 100
Air Condition	04	ROOF TOP 100
Heating Type	04	AIR DUCTED 100
Fixtures		15 100
Frame	03	MASONRY 100
Story Height		18 100
RMS		5 100
Stories	1.	1. 100
Units		0 100
Occupancy	00	NONE 100
Quality	03	Quality Level 03
DOR CODE	1600	COMMUNITY SHOPPING
MAP NUM		MKT AREA 04
NEIGHBORHOOD/LOC	4053.00	

AREA TYPE	TOTAL GROSS AREA	PCT OF BASE	TOT ADJ AREA	SUBAREA MARKET VALUE
BAS	8,400	100	8,400	1,014,512
CAN	85	30	26	3,140
CAN	175	30	52	6,280
CAN	238	30	71	8,575
CAN	326	30	98	11,836
CAN	1,040	30	312	37,682
CAN	489	30	147	17,754
FST	77	50	38	4,589
TOTALS	10,830		9,144	1,104,369

MARKET ADJUSTMENTS

TYPE	MDL	EFF. AREA	TOT ADJ PTS	EFF. BASE RATE	REPL. COST NEW	AYB	EYB	ECON	FNCT		NORM	% COND
1601	04	9,144	108.3456	123.24	1,126,907	2022	2022	0	0	0	2.00	98.00

4 COMNTYSHOP - 0% - 2023 Heated Area: 8400 HX Base Yr

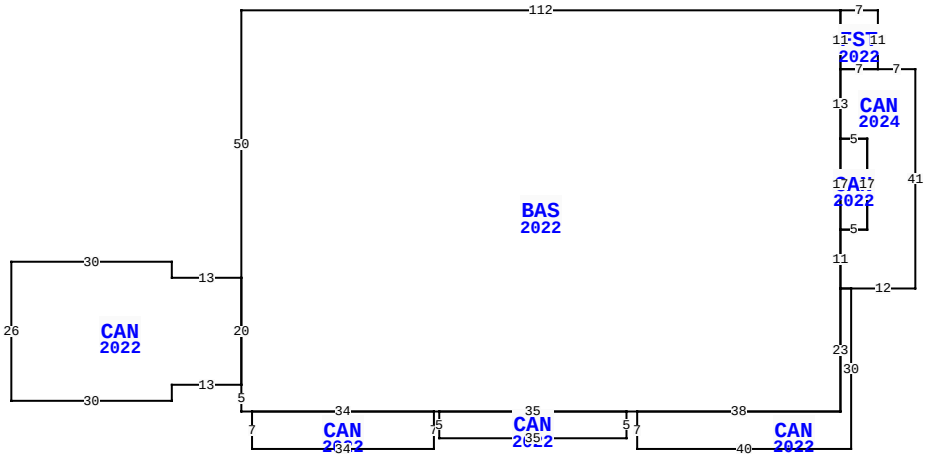

WILLIAM BURGESS BLVD, YULEE

BLD DATE	07/25/2024 REA	LGL DATE	
XF DATE		LAND DATE	06/17/2020 MF
INC DATE		AG DATE	

NASSAU COUNTY PROPERTY

VALUATION SUMMARY

VALUATION BY	STANDARD
Tax Group: 4	Tax Dist:
BUILDING MARKET VALUE	11,896,898
TOTAL MARKET OB/XF VALUE	1,020,405
TOTAL LAND VALUE - MARKET	3,640,000
TOTAL MARKET VALUE	16,557,303
SOH/AGL Deduction	0
ASSESSED VALUE	16,557,303
TOTAL EXEMPTION VALUE	0
BASE TAXABLE VALUE	16,557,303
TOTAL JUST VALUE	16,557,303
NCON VALUE	17,754
INCOME VALUE	
PREVIOUS YEAR MKT VALUE	18,374,379

PERMIT NUM	DESCRIPTION	AMT	ISSUED
22006721	BLD OUT 76000-UNI	298,732	04/29/2022
21010658	BLD OUT 76000-UNI	192,165	08/13/2021
21010659	BLD OUT 76000-UNI	213,175	08/13/2021
21010660	BLD OUT 76000-UNI	184,990	08/13/2021
21007863	NEW CONSTR - 7601	6,571,521	06/16/2021
21007746	NEW CONSTR - 7602	1,076,124	06/15/2021

SALES DATA

OFF RECORD Number	DATE	TYPE INST	Q / U	V / I	RSN CD	SALE PRICE
2307/1054	9/25/2019	SW	Q	V	01	4,215,800
GRANTOR: WILDLIGHT LLC						
GRANTEE: LOW COUNTRY LAND TR						
2307/1025	9/19/2019	QC	U	V	11	100
GRANTOR: RAYONIER FOREST RESOU						
GRANTEE: WILDLIGHT LLC						

BUILDING NOTES

BUILDING DIMENSIONS

BAS=[YR=2022;ORIG=0,0] E112 S11 S13 S17 S11 S23 W38 W2 W35 W1 W34 W2 N5 N20 N50 $
CAN=[YR=2022;ORIG=0,70] W13 S3 W30 N26 E30 S3 E13 S20 $
CAN=[YR=2022;ORIG=112,52] E2 S30 W40 N7 E38 N23 $
CAN=[YR=2022;ORIG=36,75] S7 W34 N7 E34 $
CAN=[YR=2022;ORIG=72,75] S5 W35 N5 E35 $
CAN=[YR=2022;ORIG=112,24] E5 S17 W5 N17 $
FST=[YR=2022;ORIG=112,0] E7 S11 W7 N11 $
CAN=[YR=2024;ORIG=119,11] W7 S13 E5 S17 W5 S11 E2 E12 N41 W7 $
.

EXTRA FEATURES

LN	OB/XF CODE	DESCRIPTION	BLD	CAP	L	W	UNITS	UT	Adj R	ADJ UNIT PRICE	ORIG COND	YEAR ON	YEAR ACTUAL	Q	% COND	OB/XF MKT VALUE	NOTES

LAND DESCRIPTION

TOTAL OB/XF 0

LN	USE CODE	CLS	LAND USE DESCRIPTION	CAP	RD	LOC ZONE	FRONT	DEPTH	TOT LND UTS	UNIT TYPE	DT	DPTH FACT	% COND	TOT ADJ	UNIT PRICE	ADJ UNIT PRICE	LAND VALUE	OTHER ADJUSTMENTS AND NOTES	YEAR	DENSITY	DECL	FRZ	YR	CONSRV

REVIEW DATE 07/12/2023 BY HS Total Acres: 0.00 Total Land Value: 3,640,000 Market: 0 Agricultural: 0 Common: 3,640,000 PRINTED 08/06/2024 BY SYS