LOT 106
IN OR 1238/358
PIRATES WOOD #3 UNR

MCCARTHY SEAN D & ERIN E
97035 CUTLASS WAY
YULEE, FL 32097

2024

43-3N-28-509C-0106-0000

BUILDING CHARACTERISTICS

ELEMENT	CD	CONSTRUCTION
Exterior Wall	16	WD FR STUC 90
Exterior Wall	21	STONE 10
Roof Structur	03	GABLE/HIP 100
Roof Cover	03	COMP SHNGL 100
Interior Wall	05	DRYWALL 100
Interior Floo	11	CLAY TILE 70
Interior Floo	14	CARPET 30
Air Condition	03	CENTRAL 100
Heating Type	04	AIR DUCTED 100
Bedrooms		3 100
Bathrooms		2 100
Frame	02	WOOD FRAME 100
Stories	1.	1. 100
Units		0 100
Occupancy	00	NONE 100
Quality	04	Quality Level 04
DOR CODE	0100	SINGLE FAMILY
MAP NUM		MKT AREA 04
NEIGHBORHOOD/LOC	4032.00	

AREA TYPE	TOTAL GROSS AREA	PCT OF BASE	TOT ADJ AREA	SUBAREA MARKET VALUE
BAS	1,802	100	1,802	244,399
FCP	520	25	130	17,632
FOP	96	30	29	3,933
FSP	208	40	83	11,257
SFB	560	80	448	60,760
TOTALS	3,186		2,492	337,981

MARKET ADJUSTMENTS

TYPE	MDL	EFF. AREA	TOT ADJ PTS	EFF. BASE RATE	REPL. COST NEW	AYB	EYB	ECON	FNCT		NORM	% COND
0900	01	2,492	117.9360	147.42	367,371	2007	2007	0	0	0	8.00	92.00

1 SNGL FAM – 100% - 2014 Heated Area: 2250 HX Base Yr 2014

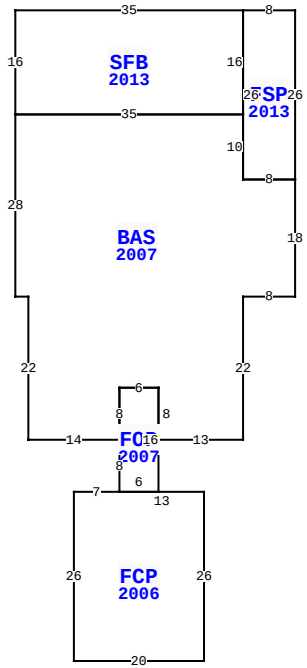

97035 CUTLASS WAY, YULEE

BLD DATE	03/12/2007	RK	LGL DATE	06/16/2023	MLU
XF DATE			LAND DATE		
INC DATE			AG DATE		

NASSAU COUNTY PROPERTY

PAGE 1 of 2 4

VALUATION SUMMARY

VALUATION BY		STANDARD
Tax Group: 4	Tax Dist:	
BUILDING MARKET VALUE		350,335
TOTAL MARKET OB/XF VALUE		17,982
TOTAL LAND VALUE - MARKET		100,000
TOTAL MARKET VALUE		468,317
SOH/AGL Deduction		221,595
ASSESSED VALUE		246,722
TOTAL EXEMPTION VALUE	HX HB	50,000
BASE TAXABLE VALUE		196,722
TOTAL JUST VALUE		468,317
NCON VALUE		0
INCOME VALUE		
PREVIOUS YEAR MKT VALUE		453,682

PERMIT NUM	DESCRIPTION	AMT	ISSUED
B1633346	20X30 FGR	0	11/01/2016
M13302	MECH OTHER	0	09/01/2007
C20322	CO ISSUED	205,000	08/01/2007
E19843	ELEC OTHER	6,500	08/01/2007
R10596	REPAIR/RRF	5,500	08/01/2007
B20322	NEW CONSTR	205,000	08/01/2007

SALES DATA

OFF RECORD Number	DATE	TYPE INST	Q / U	V / I	RSN CD	SALE PRICE
1890/1013	11/21/2013	WD	Q	I	02	240,000
GRANTOR: MCKENDREE TONY L & TA						
GRANTEE: MCCARTHY SEAN D & E						
1238/0358	6/16/2004	WD	Q	V		35,000
GRANTOR: MAULDIN-COTTRELL INC						
GRANTEE: MCKENDREE TONY L						

BUILDING NOTES

BUILDING DIMENSIONS

FSP=[YR=2013] W8 SFB=[YR=2013] W35 S16 BAS=[YR=2007] S28 E2 S22 E14 FOP=[YR=2007] S8 FCP=[YR=2006] W7 S26 E20 N26 W13 $ E6 N16 W6 S8$ N8 E6 S8 E13 N22 E8 N18 W8 N10 W35$ E35 N16$ S26 E8 N26$.

EXTRA FEATURES

LN	OB/XF CODE	DESCRIPTION	BLD	CAP	L	W	UNITS	UT	Adj R	ADJ UNIT PRICE	ORIG COND	YEAR ON	YEAR ACTUAL	Q	% COND	OB/XF MKT VALUE	NOTES
1	0812	CONCRETE C	0	100	0	0	4,781.00	SF	4.00	4.00	100	2006	2006	3	87	16,638	
2	0940	SHEDS/PORT	0	100	8	16	128.00	SF	30.00	30.00	100	2008	2008	3	35	1,344	

LAND DESCRIPTION

TOTAL OB/XF 17,982

LN	USE CODE	CLS	LAND USE DESCRIPTION	CAP	RD	LOC ZONE	FRONT	DEPTH	TOT LND UTS	UNIT TYPE	DT	DPTH FACT	% COND	TOT ADJ	UNIT PRICE	ADJ UNIT PRICE	LAND VALUE	OTHER ADJUSTMENTS AND NOTES	YEAR	DENSITY	DECL	FRZ	YR	CONSRV
1	000100	C	SFR	100		RSF-1	0.00	0.00	1.00	LT		1.00	1.00	1.00	100,000.00	100,000.00	100,000							

REVIEW DATE 01/20/2023 BY DJA Total Acres: 0.00 Total Land Value: 100,000 Market: 0 Agricultural: 0 Common: 100,000 PRINTED 08/06/2024 BY SYS

LOT 106
IN OR 1238/358
PIRATES WOOD #3 UNR

MCCARTHY SEAN D & ERIN E
97035 CUTLASS WAY
YULEE, FL 32097

2024

43-3N-28-509C-0106-0000

BUILDING CHARACTERISTICS

ELEMENT	CD	CONSTRUCTION
Exterior Wall	25	MOD METAL 100
Roof Structur	10	STEEL FRME 100
Roof Cover	12	MODULAR MT 100
Interior Wall	07	NONE 100
Interior Floo	03	CONC FINSH 100
Air Condition	01	NONE 100
Heating Type	01	NONE 100
Bedrooms		0 100
Bathrooms		0 100
Frame	05	STEEL 100
Stories	1.	1. 100
Units		0 100
Occupancy	00	NONE 100
Quality	06	Quality Level 06

DOR CODE 0100 SINGLE FAMILY
MAP NUM
MKT AREA 04
NEIGHBORHOOD/LOC 4032.00

AREA TYPE	TOTAL GROSS AREA	PCT OF BASE	TOT ADJ AREA	SUBAREA MARKET VALUE
BAS	600	100	600	12,354
TOTALS	600		600	12,354

MARKET ADJUSTMENTS

TYPE	MDL	EFF. AREA	TOT ADJ PTS	EFF. BASE RATE	REPL. COST NEW	AYB	EYB	ECON	FNCT		NORM	% COND
6500	01	600	63.2500	22.14	13,284	2016	2016	0	0	0	7.00	93.00

2 GARAGE RES – 100% - 2014 Heated Area: 600 HX Base Yr 2014

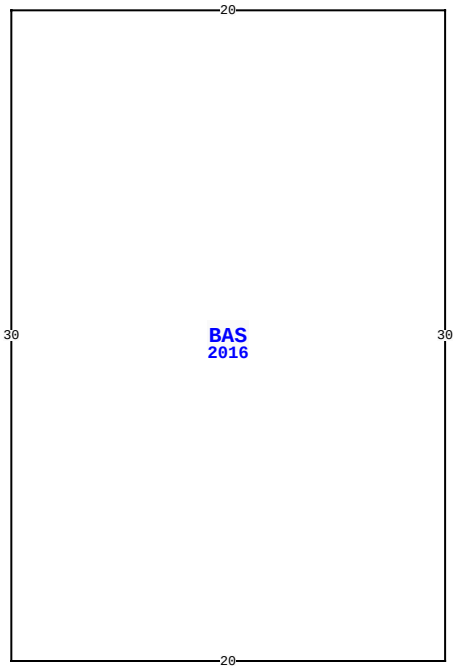

97035 CUTLASS WAY, YULEE

BLD DATE	03/12/2007 RK	LGL DATE	06/16/2023 MLU
XF DATE		LAND DATE	
INC DATE		AG DATE	

NASSAU COUNTY PROPERTY

PAGE 2 of 2 4

VALUATION SUMMARY

VALUATION BY		STANDARD
Tax Group: 4	Tax Dist:	
BUILDING MARKET VALUE		350,335
TOTAL MARKET OB/XF VALUE		17,982
TOTAL LAND VALUE - MARKET		100,000
TOTAL MARKET VALUE		468,317
SOH/AGL Deduction		221,595
ASSESSED VALUE		246,722
TOTAL EXEMPTION VALUE	HX HB	50,000
BASE TAXABLE VALUE		196,722
TOTAL JUST VALUE		468,317
NCON VALUE		0
INCOME VALUE		
PREVIOUS YEAR MKT VALUE		453,682

PERMIT NUM	DESCRIPTION	AMT	ISSUED
P12624	OTHER	0	08/01/2007
M10266	MECH OTHER	0	09/01/2005
E15409	ELEC OTHER	5,500	07/01/2005
C0515349	CO ISSUED	170,000	06/01/2005
R0507719	REPAIR/RRF	6,000	06/01/2005
P0509604	OTHER	0	06/01/2005

SALES DATA

OFF RECORD Number	DATE	TYPE INST	Q U /	V I /	RSN CD	SALE PRICE
1890/1013	11/21/2013	WD	Q	I	02	240,000
GRANTOR: MCKENDREE TONY L & TA						
GRANTEE: MCCARTHY SEAN D & E						
1238/0358	6/16/2004	WD	Q	V		35,000
GRANTOR: MAULDIN-COTTRELL INC						
GRANTEE: MCKENDREE TONY L						

BUILDING NOTES

BUILDING DIMENSIONS

BAS=[YR=2016] W20 S30 E20 N30$.

EXTRA FEATURES

LN	OB/XF CODE	DESCRIPTION	BLD	CAP	L	W	UNITS	UT	Adj R	ADJ UNIT PRICE	ORIG COND	YEAR ON	YEAR ACTUAL	Q	% COND	OB/XF MKT VALUE	NOTES

LAND DESCRIPTION

TOTAL OB/XF 0

LN	USE CODE	CLS	LAND USE DESCRIPTION	CAP	RD	LOC ZONE	FRONT	DEPTH	TOT LND UTS	UNIT TYPE	DT	DPTH FACT	% COND	TOT ADJ	UNIT PRICE	ADJ UNIT PRICE	LAND VALUE	OTHER ADJUSTMENTS AND NOTES	YEAR	DENSITY	DECL	FRZ	YR	CONSRV

REVIEW DATE 01/20/2023 BY DJA Total Acres: 0.00 Total Land Value: 100,000 Market: 0 Agricultural: 0 Common: 100,000 PRINTED 08/06/2024 BY SYS