LOTS 78 79 & 80
IN OR 1778/800
PIRATES WOOD #3 UNR

SMITH DONALD L & VICTORIA A
97272 DOUBLOON WAY
YULEE, FL 32097

2024

43-3N-28-509C-0078-0000

NASSAU COUNTY PROPERTY

BUILDING CHARACTERISTICS

ELEMENT	CD	CONSTRUCTION
Exterior Wall	06	BD/BATTEN 100
Roof Structur	03	GABLE/HIP 100
Roof Cover	03	COMP SHNGL 100
Interior Wall	05	DRYWALL 50
Interior Wall	05	DRYWALL 50
Interior Floo	12	HARDWOOD 70
Interior Floo	14	CARPET 30
Air Condition	03	CENTRAL 100
Heating Type	04	AIR DUCTED 100
Bedrooms		3 100
Bathrooms		2 100
Frame	02	WOOD FRAME 100
Stories	2.	2. 100
Units		0 100
BUD8 Adjustme	04	DIST 01 100
Occupancy	00	NONE 100
Quality	03	Quality Level 03

DOR CODE	0100	SINGLE FAMILY	
MAP NUM		MKT AREA	04
NEIGHBORHOOD/LOC	4032.00		

AREA TYPE	TOTAL GROSS AREA	PCT OF BASE	TOT ADJ AREA	SUBAREA MARKET VALUE
BAS	1,503	100	1,503	93,139
DCK	350	10	35	2,169
FGR	560	55	308	19,086
FOP	36	30	11	682
FSP	260	40	104	6,445
UUS	280	50	140	8,676
TOTALS	2,989		2,101	130,196

MARKET ADJUSTMENTS

TYPE	MDL	EFF. AREA	TOT ADJ PTS	EFF. BASE RATE	REPL. COST NEW	AYB	EYB	ECON	FNCT		NORM	% COND
0100	01	2,101	104.3700	99.15	208,314	1973	1973	0	0	0	37.50	62.50

1 SINGLE FAM – 100% - 2013 Heated Area: 1503 HX Base Yr 2013

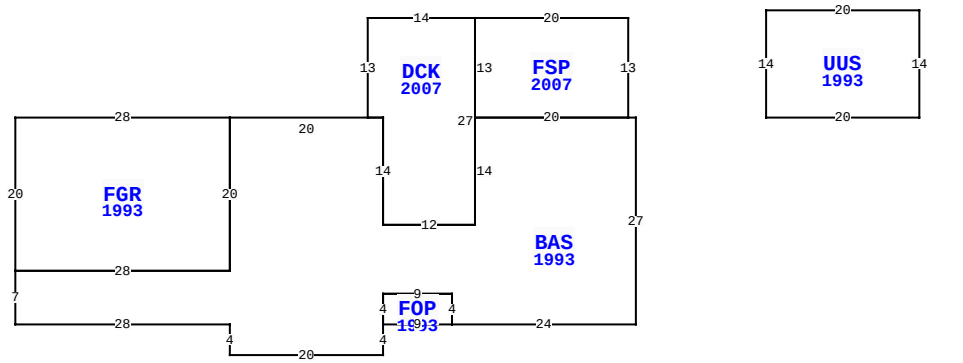

97272 DOUBLOON WAY, YULEE

BLD DATE		LGL DATE	
XF DATE		LAND DATE	06/16/2023 MLU
INC DATE		AG DATE	

VALUATION SUMMARY

VALUATION BY		STANDARD
Tax Group: 4	Tax Dist:	
BUILDING MARKET VALUE		157,801
TOTAL MARKET OB/XF VALUE		936
TOTAL LAND VALUE - MARKET		255,000
TOTAL MARKET VALUE		413,737
SOH/AGL Deduction		231,029
ASSESSED VALUE		182,708
TOTAL EXEMPTION VALUE	HX HB VX	55,000
BASE TAXABLE VALUE		127,708
TOTAL JUST VALUE		413,737
NCON VALUE		0
INCOME VALUE		
PREVIOUS YEAR MKT VALUE		408,804

PERMIT NUM	DESCRIPTION	AMT	ISSUED
22001434	REPAIR/RRF	23,480	01/25/2022

SALES DATA

OFF RECORD Number	DATE	TYPE INST	Q U	V I	RSN CD	SALE PRICE
1778/0800	2/10/2012	WD	Q	I	01	170,000
GRANTOR: WILLIAM MICHAEL D P/R						
GRANTEE: SMITH DONALD K & VI						
0598/0338	5/25/1990	WD	Q	I		105,000
GRANTOR: HURDA FRANCIS & H M						
GRANTEE: SCHNIPPERT WM & C J						

EXTRA FEATURES

LN	OB/XF CODE	DESCRIPTION	BLD	CAP	L	W	UNITS	UT	Adj R	ADJ UNIT PRICE	ORIG COND	YEAR ON	YEAR ACTUAL	Q	% COND	OB/XF MKT VALUE	NOTES
1	0810	CONCRETE A	0	100	0	0	200.00	SF	6.50	6.50	100	1996	1996	3	72	936	

BUILDING NOTES

BUILDING DIMENSIONS

BAS=[YR=1993;ORIG=0,0] W1 W20 S14 W12 N14 W20 S20 W28 S7 E28 S4 E20 N4 N4 E9 S4 E24 N27 $
FGR=[YR=1993;ORIG=-53,0] W28 S20 E28 N20 $
DCK=[YR=2007;ORIG=-21,-13] W14 S13 E2 S14 E12 N27 $
UUS=[YR=1993;ORIG=37,0] N14 W20 S14 E20 $
FSP=[YR=2007;ORIG=-1,0] N13 W20 S13 E20 $
FOP=[YR=1993;ORIG=-33,27] E9 N4 W9 S4 $
.

LAND DESCRIPTION

TOTAL OB/XF 936

LN	USE CODE	CLS	LAND USE DESCRIPTION	CAP	RD	LOC ZONE	FRONT	DEPTH	TOT LND UTS	UNIT TYPE	DT	DPTH FACT	% COND	TOT ADJ	UNIT PRICE	ADJ UNIT PRICE	LAND VALUE	OTHER ADJUSTMENTS AND NOTES	YEAR	DENSITY	DECL	FRZ	YR	CONSRV
1	000100	C	SFR	100		RSF-1	0.00	0.00	3.00	LT		1.00	1.00	0.85	100,000.00	85,000.00	255,000							

REVIEW DATE 01/20/2023 BY DJA Total Acres: 0.00 Total Land Value: 255,000 Market: 0 Agricultural: 0 Common: 255,000 PRINTED 08/06/2024 BY SYS

LOTS 78 79 & 80
IN OR 1778/800
PIRATES WOOD #3 UNR

SMITH DONALD L & VICTORIA A
97272 DOUBLOON WAY
YULEE, FL 32097

2024

43-3N-28-509C-0078-0000

NASSAU COUNTY PROPERTY

BUILDING CHARACTERISTICS

ELEMENT	CD	CONSTRUCTION
Exterior Wall	05	AVERAGE 100
Roof Structur	03	GABLE/HIP 100
Roof Cover	03	COMP SHNGL 100
Interior Wall	05	DRYWALL 100
Interior Floo	14	CARPET 100
Air Condition	01	NONE 100
Heating Type	03	FORCED AIR 100
Bedrooms		1 100
Bathrooms		0.5 100
Frame	02	WOOD FRAME 100
Stories	1.	1. 100
Units		0 100
BUD8 Adjustme	04	DIST 01 100
Occupancy	00	NONE 100
Quality	02	Quality Level 02

DOR CODE 0100 SINGLE FAMILY
MAP NUM | MKT AREA 04
NEIGHBORHOOD/LOC 4032.00

AREA TYPE	TOTAL GROSS AREA	PCT OF BASE	TOT ADJ AREA	SUBAREA MARKET VALUE
BAS	440	100	440	18,949
FST	329	55	181	7,795
UOP	20	20	4	172
UOP	80	20	16	689
TOTALS	869		641	27,605

MARKET ADJUSTMENTS

TYPE	MDL	EFF. AREA	TOT ADJ PTS	EFF. BASE RATE	REPL. COST NEW	AYB	EYB	ECON	FNCT		NORM	% COND
0150	01	641	103.4550	51.73	33,159	1985	1985	0	0	0	16.75	83.25

2 ACCESORY U – 100% - 2013 Heated Area: 440 HX Base Yr 2013

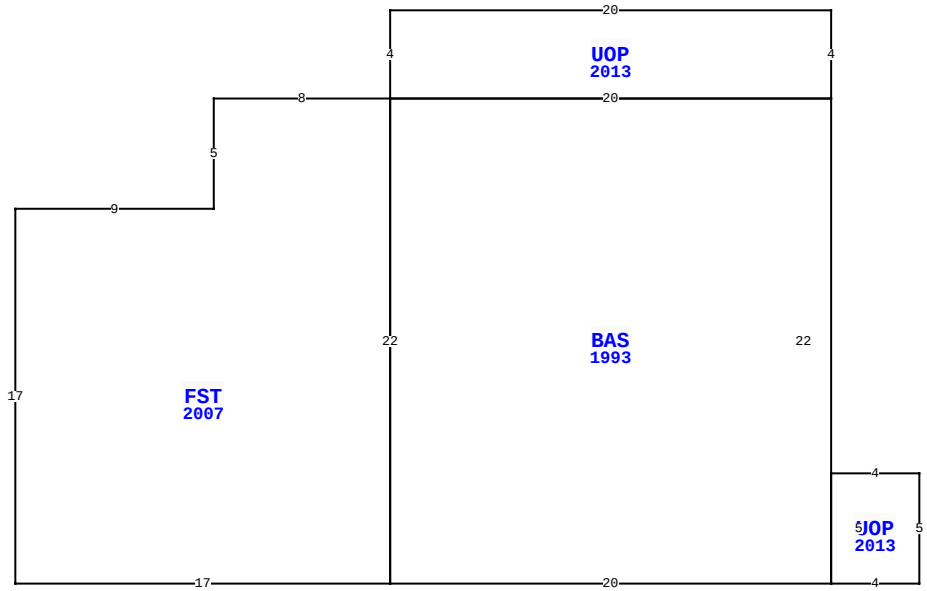

97272 DOUBLOON WAY, YULEE

BLD DATE		LGL DATE	
XF DATE		LAND DATE	06/16/2023 MLU
INC DATE		AG DATE	

VALUATION SUMMARY

VALUATION BY		STANDARD
Tax Group: 4	Tax Dist:	
BUILDING MARKET VALUE		157,801
TOTAL MARKET OB/XF VALUE		936
TOTAL LAND VALUE - MARKET		255,000
TOTAL MARKET VALUE		413,737
SOH/AGL Deduction		231,029
ASSESSED VALUE		182,708
TOTAL EXEMPTION VALUE	HX HB VX	55,000
BASE TAXABLE VALUE		127,708
TOTAL JUST VALUE		413,737
NCON VALUE		0
INCOME VALUE		
PREVIOUS YEAR MKT VALUE		408,804

PERMIT NUM	DESCRIPTION	AMT	ISSUED

SALES DATA

OFF RECORD Number	DATE	TYPE INST	Q / U	V / I	RSN CD	SALE PRICE
1778/0800	2/10/2012	WD	Q	I	01	170,000
GRANTOR: WILLIAM MICHAEL D P/R						
GRANTEE: SMITH DONALD K & VI						
0598/0338	5/25/1990	WD	Q	I		105,000
GRANTOR: HURDA FRANCIS & H M						
GRANTEE: SCHNIPPERT WM & C J						

BUILDING NOTES

BUILDING DIMENSIONS

UOP=[YR=2013] W20 S4 FST=[YR=2007] W8 S5 W9 S17 E17
BAS=[YR=1993] E20 UOP=[YR=2013] E4 N5 W4 S5$ N22 W20 S22$
N22$ E20 N4$.

EXTRA FEATURES

LN	OB/XF CODE	DESCRIPTION	BLD	CAP	L	W	UNITS	UT	Adj R	ADJ UNIT PRICE	ORIG COND	YEAR ON	YEAR ACTUAL	Q	% COND	OB/XF MKT VALUE	NOTES

LAND DESCRIPTION

TOTAL OB/XF 0

LN	USE CODE	CLS	LAND USE DESCRIPTION	CAP	RD	LOC ZONE	FRONT	DEPTH	TOT LND UTS	UNIT TYPE	DT	DPTH FACT	% COND	TOT ADJ	UNIT PRICE	ADJ UNIT PRICE	LAND VALUE	OTHER ADJUSTMENTS AND NOTES	YEAR	DENSITY	DECL	FRZ	YR	CONSRV

REVIEW DATE 01/20/2023 BY DJA Total Acres: 0.00 Total Land Value: 255,000 Market: 0 Agricultural: 0 Common: 255,000 PRINTED 08/06/2024 BY SYS