LOT 36
IN OR 1367/689
PIRATES WOOD 3 UNR

SHREVE-RITTER CAROLYN
97109 PIRATES POINT ROAD
YULEE, FL 32097

2024

43-3N-28-509C-0036-0000

BUILDING CHARACTERISTICS

ELEMENT	CD	CONSTRUCTION
Exterior Wall	12	CEDAR 100
Roof Structur	08	IRREGULAR 100
Roof Cover	03	COMP SHNGL 100
Interior Wall	08	DECORATIVE 70
Interior Wall	05	DRYWALL 30
Interior Floo	14	CARPET 70
Interior Floo	15	HARDTILE 30
Air Condition	03	CENTRAL 100
Heating Type	04	AIR DUCTED 100
Bedrooms		3 100
Bathrooms		2 100
Frame	02	WOOD FRAME 100
Stories	2.	2. 100
Units		0 100
BUD8 Adjustme	04	DIST 01 100
Occupancy	00	NONE 100
Quality	06	Quality Level 06
DOR CODE	0100	SINGLE FAMILY
MAP NUM		MKT AREA 04
NEIGHBORHOOD/LOC	4032.00	

AREA TYPE	TOTAL GROSS AREA	PCT OF BASE	TOT ADJ AREA	SUBAREA MARKET VALUE
BAS	1,344	100	1,344	123,335
FDG	625	60	375	34,412
FOP	25	30	8	734
FOP	48	30	14	1,285
FOP	48	30	14	1,285
FOP	48	30	14	1,285
FOP	112	30	34	3,120
FOP	432	30	130	11,930
FUS	1,092	100	1,092	100,210
SFB	625	80	500	45,883
TOTALS	4,615		3,589	329,351

MARKET ADJUSTMENTS

TYPE	MDL	EFF. AREA	TOT ADJ PTS	EFF. BASE RATE	REPL. COST NEW	AYB	EYB	ECON	FNCT		NORM	% COND
0100	01	3,589	121.5090	115.43	414,278	1982	1982	0	0	0	20.50	79.50

1 SINGLE FAM – 100% - 2022 Heated Area: 2936 HX Base Yr

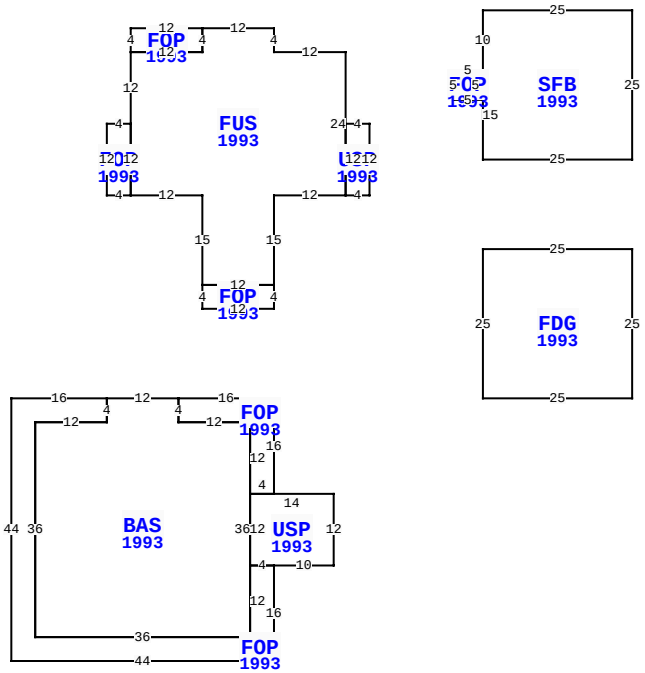

** This building has 12 Sub-Areas

97109 PIRATES POINT RD, YULEE

BLD DATE	05/19/2008 RK	LGL DATE	
XF DATE		LAND DATE	06/16/2023 MLU
INC DATE		AG DATE	

NASSAU COUNTY PROPERTY

PAGE 1 of 1 4

VALUATION SUMMARY

VALUATION BY		STANDARD
Tax Group: 4	Tax Dist:	
BUILDING MARKET VALUE		329,351
TOTAL MARKET OB/XF VALUE		7,434
TOTAL LAND VALUE - MARKET		100,000
TOTAL MARKET VALUE		436,785
SOH/AGL Deduction		1,646
ASSESSED VALUE		435,139
TOTAL EXEMPTION VALUE	13	435,139
BASE TAXABLE VALUE		0
TOTAL JUST VALUE		436,785
NCON VALUE		0
INCOME VALUE		
PREVIOUS YEAR MKT VALUE		422,465

PERMIT NUM	DESCRIPTION	AMT	ISSUED

SALES DATA

OFF RECORD Number	DATE	TYPE INST	Q / U	V / I	RSN CD	SALE PRICE
1367/0689	11/15/2005	QC	U	I	07	100
GRANTOR: SHREVO-RITTER CAROLYN						
GRANTEE: SHREVE-RITTER CAROL						
1243/0726	7/06/2004	QC	U	I	01	100
GRANTOR: RITTER RICHARD S & CA						
GRANTEE: SHREVO-RITTER CAROL						

BUILDING NOTES

BUILDING DIMENSIONS

FOP=[YR=1993] W16 BAS=[YR=1993] W12 FOP=[YR=1993] W16 S44 E44 N16 USP=[YR=1993] E10 N12 W14 S12 E4 $ W4 S12 W36 N36 E12 N4$ S4 W12 S36 E36 N36 W12 N4 $ S4 E12 S12 E4 N16 $PTR= N15 FOP=[YR=1993] N4 FUS=[YR=1993] N15 E12 USP=[YR=1993] E4 N12 W4 S12 $ N24 W12 N4 W12 FOP=[YR=1993] W12 S4 E12 N4 $ S4 W12 S12 FOP=[YR=1993] W4 S12 E4 N12 $ S12 E12 S15 E12 $ W12 S4 E12 $ S15$ PTR=E35FDG=[YR=1993] E25 N25 PTR= N15 SFB=[YR=1993] N25 W25 S10 FOP=[YR=1993] W5 S5 E5 N5 $ S15 E25$ S15$ W25 S25 $ W35$.

EXTRA FEATURES

LN	OB/XF CODE	DESCRIPTION	BLD	CAP	L	W	UNITS	UT	Adj R	ADJ UNIT PRICE	ORIG COND	YEAR ON	YEAR ACTUAL	Q	% COND	OB/XF MKT VALUE	NOTES
1	0812	CONCRETE C	0	100	0	0	2,468.00	SF	4.00	4.00	100	100	100	3	20	1,974	
2	1242	WD DECK A	0	100	0	0	224.00	SF	10.00	10.00	100	1982	1982	3	20	448	
3	0500	FP-PRE FAB	0	100	0	0	2.00	UT	3,500.00	3,500.00	100	1982	1982	3	51.5	3,605	
4	0820	WOOD WALK	0	100	0	0	87.00	SF	11.75	11.75	100	1985	1985	3	40	409	
5	1242	WD DECK A	0	100	16	14	224.00	SF	10.00	10.00	100	1985	1985	3	20	448	
6	1242	WD DECK A	0	100	15	17	255.00	SF	10.00	10.00	100	1985	1985	3	20	510	
7	0100	BAR-B-Q	0	100	0	0	1.00	UT	200.00	200.00	100	1985	1985	3	20	40	

LAND DESCRIPTION

TOTAL OB/XF 7,434

LN	USE CODE	CLS	LAND USE DESCRIPTION	CAP	RD	LOC ZONE	FRONT	DEPTH	TOT LND UTS	UNIT TYPE	DT	DPTH FACT	% COND	TOT ADJ	UNIT PRICE	ADJ UNIT PRICE	LAND VALUE	OTHER ADJUSTMENTS AND NOTES	YEAR	DENSITY	DECL	FRZ	YR	CONSRV
1	000100	C	SFR	100		RSF-1	0.00	0.00	1.00	LT		1.00	1.00	1.00	100,000.00	100,000.00	100,000							

REVIEW DATE 01/06/2019 BY KWX Total Acres: 0.00 Total Land Value: 100,000 Market: 0 Agricultural: 0 Common: 100,000 PRINTED 08/06/2024 BY SYS