LOT 12 IN OR 2035/1962
CHESTER FOREST UNR &
PT OF TRACT A (S-2)

ELLERKER FRANK & ELLEN
96893 BLACKROCK ROAD
YULEE, FL 32097

2024

43-3N-28-5098-0012-0000

BUILDING CHARACTERISTICS

ELEMENT	CD	CONSTRUCTION
Exterior Wall	05	AVERAGE 100
Roof Structur	03	GABLE/HIP 100
Roof Cover	03	COMP SHNGL 100
Interior Wall	05	DRYWALL 100
Interior Floo	12	HARDWOOD 60
Interior Floo	11	CLAY TILE 40
Air Condition	03	CENTRAL 100
Heating Type	04	AIR DUCTED 100
Bedrooms		4 100
Bathrooms		2 100
Frame	02	WOOD FRAME 100
Stories	1.5	1.5 100
Units		0 100
Occupancy	00	NONE 100
Quality	02	Quality Level 02
DOR CODE	0100	SINGLE FAMILY
MAP NUM		MKT AREA 04
NEIGHBORHOOD/LOC	4031.00	

AREA TYPE	TOTAL GROSS AREA	PCT OF BASE	TOT ADJ AREA	SUBAREA MARKET VALUE
BAS	1,551	100	1,551	183,840
FGR	473	55	260	30,818
FOP	35	30	10	1,186
FOP	324	30	97	11,498
FUS	294	100	294	34,847
FUS	475	100	475	56,302
TOTALS	3,152		2,687	318,490

MARKET ADJUSTMENTS

TYPE	MDL	EFF. AREA	TOT ADJ PTS	EFF. BASE RATE	REPL. COST NEW	AYB	EYB	ECON	FNCT		NORM	% COND
0900	01	2,687	101.4144	126.77	340,631	2009	2009	0	0	0	6.50	93.50

1 SNGL FAM – 100% - 2017 Heated Area: 2320 HX Base Yr 2017

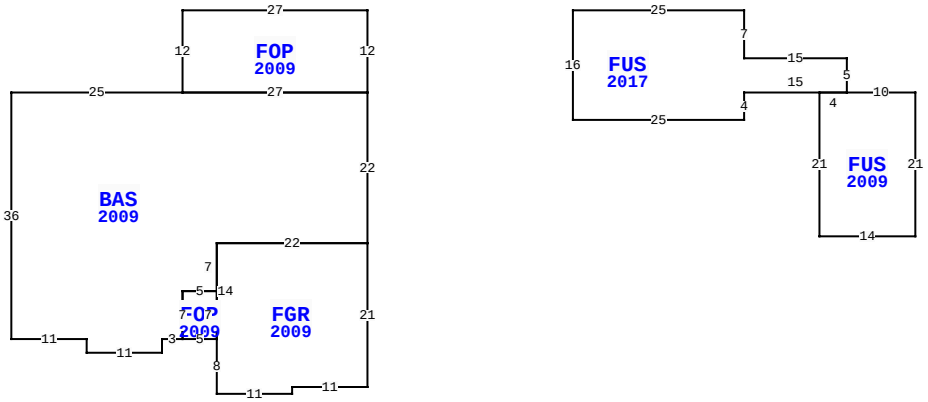

96893 BLACKROCK RD, YULEE

BLD DATE	03/03/2023 NW	LGL DATE	
XF DATE		LAND DATE	06/20/2023 MLU
INC DATE		AG DATE	

NASSAU COUNTY PROPERTY

PAGE 1 of 1 4

VALUATION SUMMARY

VALUATION BY		STANDARD
Tax Group: 4	Tax Dist:	
BUILDING MARKET VALUE		318,490
TOTAL MARKET OB/XF VALUE		19,922
TOTAL LAND VALUE - MARKET		75,000
TOTAL MARKET VALUE		413,412
SOH/AGL Deduction		196,451
ASSESSED VALUE		216,961
TOTAL EXEMPTION VALUE	HX HB	50,000
BASE TAXABLE VALUE		166,961
TOTAL JUST VALUE		413,412
NCON VALUE		0
INCOME VALUE		
PREVIOUS YEAR MKT VALUE		395,541

PERMIT NUM	DESCRIPTION	AMT	ISSUED
C19218	CO ISSUED	0	01/27/2009
M13212	MECH OTHER	0	08/01/2007
B19218	NEW CONSTR	180,444	12/01/2006
E18538	ELEC OTHER	0	12/01/2006
R09973	REPAIR/RRF	1,000	12/01/2006

SALES DATA

OFF RECORD Number	DATE	TYPE INST	Q / U	V / I	RSN CD	SALE PRICE
2035/1962	3/23/2016	WD	U	I	11	100
GRANTOR: KIDD ROBERT L & TINA						
GRANTEE: ELLERKER FRANK & EL						
2035/1942	3/23/2016	WD	U	V	37	241,900
GRANTOR: KIDD ROBERT L & TINA						
GRANTEE: ELLERKER FRANK & EL						

BUILDING NOTES

BUILDING DIMENSIONS

FOP=[YR=2009] W27 S12 BAS=[YR=2009] W25 S36 E11 S2 E11 N2 E3 FOP=[YR=2009] E5 FGR=[YR=2009] S8 E11 N1 E11 N21 W22 S14 $ N7 W5 S7 $ N7 E5 N7 E22 N22 W27$ E27 N12 $ PTR=E30 FUS=[YR=2017] E25 S7 E15 S5 FUS=[YR=2009] E10 S21 W14 N21 E4$ W15 S4 W25 N16$ W30 $.

EXTRA FEATURES

LN	OB/XF CODE	DESCRIPTION	BLD	CAP	L	W	UNITS	UT	Adj R	ADJ UNIT PRICE	ORIG COND	YEAR ON	YEAR ACTUAL	Q	% COND	OB/XF MKT VALUE	NOTES
1	0500	FP-PRE FAB	0	100	0	0	1.00	UT	3,500.00	3,500.00	100	2009	2009	3	93	3,255	
2	0812	CONCRETE C	0	100	0	0	1,524.00	SF	4.00	4.00	100	2009	2009	3	90	5,486	
3	0500	FP-PRE FAB	0	100	0	0	1.00	UT	3,500.00	3,500.00	100	2009	2009	3	93	3,255	
4	0510	GARAGE WD-	0	100	24	14	336.00	SF	35.00	35.00	100	2010	2010	3	60	7,056	
5	0462	ST/AL FNC	0	100	16	0	64.00	SF	20.00	20.00	100	2012	2012	3	68	870	

LAND DESCRIPTION

TOTAL OB/XF 19,922

LN	USE CODE	CLS	LAND USE DESCRIPTION	CAP	RD	LOC ZONE	FRONT	DEPTH	TOT LND UTS	UNIT TYPE	DT	DPTH FACT	% COND	TOT ADJ	UNIT PRICE	ADJ UNIT PRICE	LAND VALUE	OTHER ADJUSTMENTS AND NOTES	YEAR	DENSITY	DECL	FRZ	YR	CONSRV
1	000134	C	SFR POND	100		RSF-1	0.00	0.00	1.00	LT		1.00	1.00	1.00	75,000.00	75,000.00	75,000							

REVIEW DATE 02/06/2019 BY KWX Total Acres: 0.59 Total Land Value: 75,000 Market: 0 Agricultural: 0 Common: 75,000 PRINTED 08/06/2024 BY SYS