LOT 10
IN OR 1225/1304 & OR 1347/95
ARNOLD RIDGE PB 6/251

KEIGHTLEY JANE LOUISE/KEIGHTLEY EDWARD J ET AL
97088 CASTLE RIDGE DRIVE
YULEE, FL 32097

2024

43-3N-28-082A-0010-0000

BUILDING CHARACTERISTICS

ELEMENT	CD	CONSTRUCTION
Exterior Wall	16	WD FR STUC 100
Roof Structur	03	GABLE/HIP 100
Roof Cover	03	COMP SHNGL 100
Interior Wall	05	DRYWALL 100
Interior Floo	14	CARPET 60
Interior Floo	08	SHT VINYL 40
Air Condition	03	CENTRAL 100
Heating Type	04	AIR DUCTED 100
Bedrooms		3 100
Bathrooms		2 100
Frame	02	WOOD FRAME 100
Stories	1.	1. 100
Units		0 100
Occupancy	00	NONE 100
Quality	02	Quality Level 02
DOR CODE	0100	SINGLE FAMILY
MAP NUM		MKT AREA 04
NEIGHBORHOOD/LOC	4033.00	

AREA TYPE	TOTAL GROSS AREA	PCT OF BASE	TOT ADJ AREA	SUBAREA MARKET VALUE
BAS	2,164	100	2,164	238,888
FGR	400	55	220	24,287
FOP	54	30	16	1,767
FOP	308	30	92	10,156
TOTALS	2,926		2,492	275,096

MARKET ADJUSTMENTS

TYPE	MDL	EFF. AREA	TOT ADJ PTS	EFF. BASE RATE	REPL. COST NEW	AYB	EYB	ECON	FNCT		NORM	% COND
0900	01	2,492	97.5840	121.98	303,974	2004	2004	0	0	0	9.50	90.50

1 SNGL FAM – 100% - 2005 Heated Area: 2164 HX Base Yr 2005

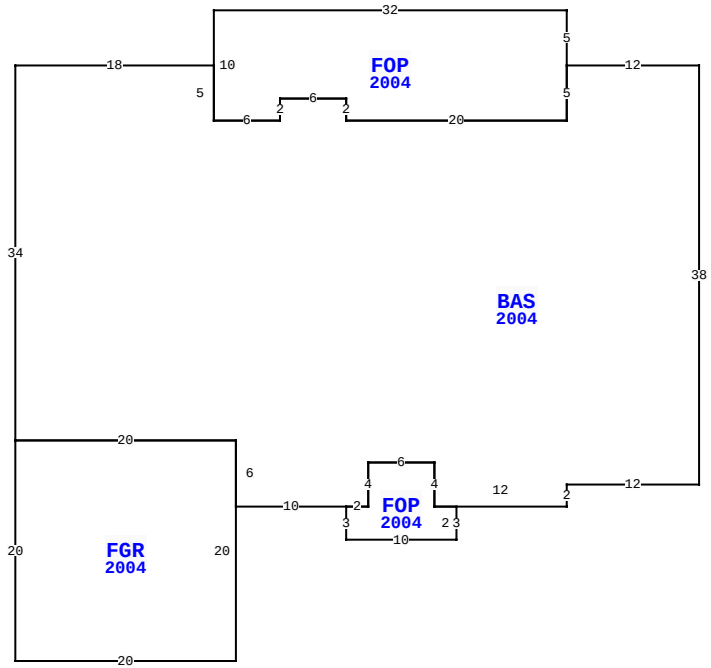

97088 CASTLE RIDGE DR, YULEE

BLD DATE	03/03/2023 NW	LGL DATE	
XF DATE		LAND DATE	06/15/2023 MLU
INC DATE		AG DATE	

NASSAU COUNTY PROPERTY

PAGE 1 of 1 4

VALUATION SUMMARY

VALUATION BY		STANDARD
Tax Group: 4	Tax Dist:	
BUILDING MARKET VALUE		275,096
TOTAL MARKET OB/XF VALUE		24,452
TOTAL LAND VALUE - MARKET		75,000
TOTAL MARKET VALUE		374,548
SOH/AGL Deduction		167,940
ASSESSED VALUE		206,608
TOTAL EXEMPTION VALUE	HX HB	50,000
BASE TAXABLE VALUE		156,608
TOTAL JUST VALUE		374,548
NCON VALUE		0
INCOME VALUE		
PREVIOUS YEAR MKT VALUE		350,248

PERMIT NUM	DESCRIPTION	AMT	ISSUED

SALES DATA

OFF RECORD Number	DATE	TYPE INST	Q / U	V / I	RSN CD	SALE PRICE
1347/0095	9/02/2005	QC	U	I	01	100
GRANTOR: JOHNSON STEVEN MICHAE						
GRANTEE: KEIGHTLEY JANE L ET						
1258/0802	9/10/2004	QC	U	V	01	100
GRANTOR: JOHNSON JANE L &						
GRANTEE: KEIGHTLEY JANE LOUI						

BUILDING NOTES

BUILDING DIMENSIONS

BAS=[YR=2004] W12 FOP=[YR=2004] N5 W32 S10 E6 N2 E6 S2 E20 N5$ S5 W20 N2 W6 S2 W6 N5 W18 S34 FGR=[YR=2004] S20 E20 N20 W20$ E20 S6 E10 FOP=[YR=2004] S3 E10 N3 W2 N4 W6 S4 W2$ E2 N4 E6 S4 E12 N2 E12 N38 $.

EXTRA FEATURES

LN	OB/XF CODE	DESCRIPTION	BLD	CAP	L	W	UNITS	UT	Adj R	ADJ UNIT PRICE	ORIG COND	YEAR ON	YEAR ACTUAL	Q	% COND	OB/XF MKT VALUE	NOTES
1	0500	FP-PRE FAB	0	100	0	0	1.00	UT	3,500.00	3,500.00	100	2004	2004	3	88	3,080	
2	0812	CONCRETE C	0	100	0	0	1,333.00	SF	4.00	4.00	100	2004	2004	3	84	4,479	
3	0861	POOL GUNIT	0	100	0	0	405.00	SF	85.00	85.00	100	2004	2004	3	36	12,393	
4	0910	SCRN RM L	0	100	0	0	607.00	SF	15.00	15.00	100	2004	2004	3	22	2,003	
5	0845	KOOL DECK	0	100	0	0	202.00	SF	7.25	7.25	100	2004	2004	3	84	1,230	
6	0940	SHEDS/PORT	0	100	0	0	192.00	SF	30.00	30.00	100	2004	2004	3	22	1,267	

LAND DESCRIPTION

TOTAL OB/XF 24,452

LN	USE CODE	CLS	LAND USE DESCRIPTION	CAP	RD	LOC ZONE	FRONT	DEPTH	TOT LND UTS	UNIT TYPE	DT	DPTH FACT	% COND	TOT ADJ	UNIT PRICE	ADJ UNIT PRICE	LAND VALUE	OTHER ADJUSTMENTS AND NOTES	YEAR	DENSITY	DECL	FRZ	YR	CONSRV
1	000100	C	SFR	100		RSF-1	0.00	0.00	1.00	LT		1.00	1.00	1.00	75,000.00	75,000.00	75,000							

REVIEW DATE 05/12/2019 BY KBA Total Acres: 0.00 Total Land Value: 75,000 Market: 0 Agricultural: 0 Common: 75,000 PRINTED 08/06/2024 BY SYS