IN OR 1770/1907
EX R/W OR 978/297 &
EX R/W OR 1015/1600

JENKINS JOHN A JR
95098 FRANK WARD RD
FERNANDINA BEACH, FL 32034

2024

43-2N-28-0000-0003-0000

BUILDING CHARACTERISTICS

ELEMENT	CD	CONSTRUCTION
Exterior Wall	15	CONC BLOCK 100
Roof Structur	03	GABLE/HIP 100
Roof Cover	03	COMP SHNGL 100
Interior Wall	05	DRYWALL 100
Interior Floo	14	CARPET 70
Interior Floo	08	SHT VINYL 30
Air Condition	03	CENTRAL 100
Heating Type	04	AIR DUCTED 100
Bedrooms		2 100
Bathrooms		2 100
Frame	02	WOOD FRAME 100
Stories	1.	1. 100
Units		0 100
BUD8 Adjustme	04	DIST 01 100
Occupancy	00	NONE 100
Quality	03	Quality Level 03
DOR CODE	0100	SINGLE FAMILY
MAP NUM		MKT AREA 04
NEIGHBORHOOD/LOC	4005.00	

AREA TYPE	TOTAL GROSS AREA	PCT OF BASE	TOT ADJ AREA	SUBAREA MARKET VALUE
BAS	1,356	100	1,356	97,562
BAS	90	100	90	6,476
BAS	340	100	340	24,462
FOP	70	30	21	1,511
UDG	308	55	169	12,159
UGR	550	45	248	17,843
UOP	30	20	6	431
TOTALS	2,744		2,230	160,445

MARKET ADJUSTMENTS

TYPE	MDL	EFF. AREA	TOT ADJ PTS	EFF. BASE RATE	REPL. COST NEW	AYB	EYB	ECON	FNCT		NORM	% COND
0100	01	2,230	99.0000	94.05	209,732	1976	1976	0	0	0	23.50	76.50

1 SINGLE FAM – 100% - 2016 Heated Area: 1786 HX Base Yr 2016

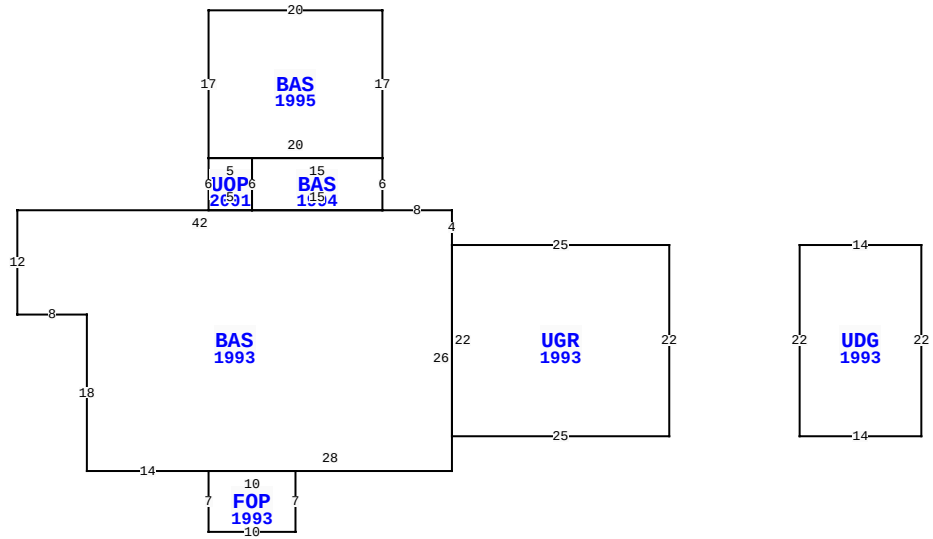

95098 FRANK WARD RD, FERNANDINA BEACH

BLD DATE		LGL DATE	
XF DATE		LAND DATE	05/30/2023 MLU
INC DATE		AG DATE	

NASSAU COUNTY PROPERTY

PAGE 1 of 1 4

VALUATION SUMMARY

VALUATION BY		STANDARD
Tax Group: 4	Tax Dist:	
BUILDING MARKET VALUE		160,445
TOTAL MARKET OB/XF VALUE		30,309
TOTAL LAND VALUE - MARKET		364,800
TOTAL MARKET VALUE		555,554
SOH/AGL Deduction		328,829
ASSESSED VALUE		226,725
TOTAL EXEMPTION VALUE	HX HB	50,000
BASE TAXABLE VALUE		176,725
TOTAL JUST VALUE		555,554
NCON VALUE		0
INCOME VALUE		
PREVIOUS YEAR MKT VALUE		549,205

PERMIT NUM	DESCRIPTION	AMT	ISSUED
B25614	ADDITION	30,845	02/01/2012
B0209802	XFOB	5,000	06/01/2002
B07816	NEW CONSTR	24,000	12/01/2000

SALES DATA

OFF RECORD Number	DATE	TYPE INST	Q / U	V / I	RSN CD	SALE PRICE
1770/1907	12/29/2011	PR	U	I	19	100

GRANTOR: DAVIS CLYDE W P/R

GRANTEE: JENKINS JOHN A JR

BUILDING NOTES

BUILDING DIMENSIONS

UGR=[YR=1993] W25 BAS=[YR=1993] N4 W8 BAS=[YR=1994] N6 BAS=[YR=1995] N17 W20 S17 UOP=[YR=2001] S6 E5 N6 W5 $ E20 $W15 S6 E15 $ W42 S12 E8 S18 E14 FOP=[YR=1993] S7 E10 N7 W10 $ E28 N26 $ S22 E25 N22 $ PTR= E15 UDG=[YR=1993] E14 S22 W14 N22 $ W15 $.

EXTRA FEATURES

LN	OB/XF CODE	DESCRIPTION	BLD	CAP	L	W	UNITS	UT	Adj R	ADJ UNIT PRICE	ORIG COND	YEAR ON	YEAR ACTUAL	Q	% COND	OB/XF MKT VALUE	NOTES
1	0200	BARN WD 0-	0	100	0	0	864.00	SF	20.00	20.00	100	1980	1980	3	20	3,456	
2	0500	FP-PRE FAB	0	100	0	0	1.00	UT	3,500.00	3,500.00	100	1983	1983	3	54	1,890	
3	0351	CARPORT MT	0	100	20	20	400.00	SF	10.00	10.00	100	1990	1990	3	20	800	
4	0511	GARAGE CB-	0	100	24	30	720.00	SF	40.00	40.00	100	2001	2001	3	80	23,040	
5	0810	CONCRETE A	0	100	0	0	216.00	SF	6.50	6.50	100	2001	2001	3	80	1,123	

LAND DESCRIPTION

TOTAL OB/XF 30,309

LN	USE CODE	CLS	LAND USE DESCRIPTION	CAP	RD	LOC ZONE	FRONT	DEPTH	TOT LND UTS	UNIT TYPE	DT	DPTH FACT	% COND	TOT ADJ	UNIT PRICE	ADJ UNIT PRICE	LAND VALUE	OTHER ADJUSTMENTS AND NOTES	YEAR	DENSITY	DECL	FRZ	YR	CONSRV
1	000115	C	SFR ACRES	100		OR	0.00	0.00	6.08	AC		1.00	1.00	0.80	75,000.00	60,000.00	364,800							

REVIEW DATE 05/12/2019 BY KBA Total Acres: 6.08 Total Land Value: 364,800 Market: 0 Agricultural: 0 Common: 364,800 PRINTED 08/06/2024 BY SYS