LOT 3
IN OR 838/1638
WILSON NECK HILLS PB 4/62

SOUTHWELL F KEITH & PATRICIA M
85274 ELISE ROAD
YULEE, FL 32097

2024

43-2N-27-4642-0003-0000

NASSAU COUNTY PROPERTY

BUILDING CHARACTERISTICS

ELEMENT	CD	CONSTRUCTION
Exterior Wall	19	COMMON BRK 90
Exterior Wall	10	ABOVE AVG 10
Roof Structur	03	GABLE/HIP 100
Roof Cover	03	COMP SHNGL 100
Interior Wall	05	DRYWALL 100
Interior Floo	14	CARPET 80
Interior Floo	11	CLAY TILE 20
Air Condition	03	CENTRAL 100
Heating Type	04	AIR DUCTED 100
Bedrooms		3 100
Bathrooms		2 100
Frame	02	WOOD FRAME 100
Stories	1.5	1.5 100
Units		0 100
BUD8 Adjustme	04	DIST 01 100
Occupancy	00	NONE 100
Quality	04	Quality Level 04
DOR CODE	0100	SINGLE FAMILY
MAP NUM		MKT AREA 04
NEIGHBORHOOD/LOC	4048.00	

AREA TYPE	TOTAL GROSS AREA	PCT OF BASE	TOT ADJ AREA	SUBAREA MARKET VALUE
BAS	1,152	100	1,152	96,154
FEP	171	80	137	11,435
FOP	32	30	10	835
FUS	576	100	576	48,077
SFB	528	80	422	35,223
TOTALS	2,459		2,297	191,723

MARKET ADJUSTMENTS

TYPE	MDL	EFF. AREA	TOT ADJ PTS	EFF. BASE RATE	REPL. COST NEW	AYB	EYB	ECON	FNCT		NORM	% COND
0100	01	2,297	125.7438	119.46	274,400	1980	1980	0	0	0	30.13	69.87

1 SINGLE FAM – 100% - 2004 Heated Area: 2150 HX Base Yr 2004

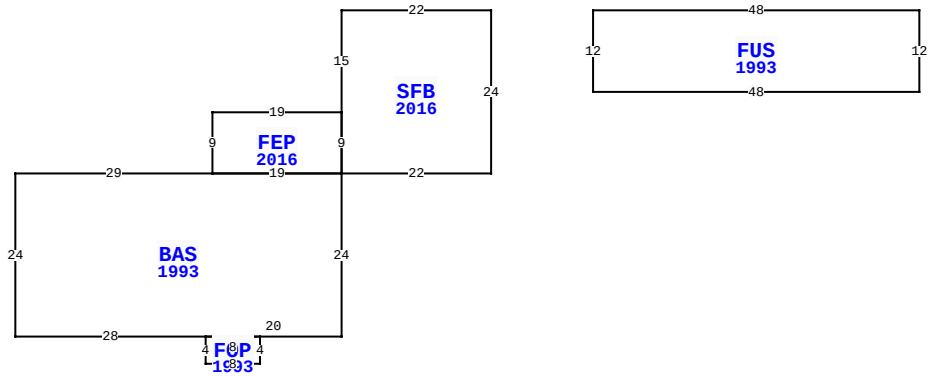

85274 ELISE RD, YULEE

BLD DATE		LGL DATE	
XF DATE		LAND DATE	
INC DATE		AG DATE	

VALUATION SUMMARY

VALUATION BY		STANDARD
Tax Group: 4	Tax Dist:	
BUILDING MARKET VALUE		191,723
TOTAL MARKET OB/XF VALUE		4,757
TOTAL LAND VALUE - MARKET		80,000
TOTAL MARKET VALUE		276,480
SOH/AGL Deduction		138,858
ASSESSED VALUE		137,622
TOTAL EXEMPTION VALUE	HX HB	50,000
BASE TAXABLE VALUE		87,622
TOTAL JUST VALUE		276,480
NCON VALUE		0
INCOME VALUE		
PREVIOUS YEAR MKT VALUE		268,281

PERMIT NUM	DESCRIPTION	AMT	ISSUED
B1632436	GARAGE REPAIR	0	06/02/2016
B1632070	DEMOLITION	0	04/01/2016
BL47280	XFOB	6,000	08/01/2000

SALES DATA

OFF RECORD Number	DATE	TYPE INST	Q / U	V / I	RSN CD	SALE PRICE
0838/1638	6/23/1998	WD	Q	I		91,000
GRANTOR: TAYLOR FRANK V & STAC						
GRANTEE: SOUTHWELL F KEITH &						
0767/0999	8/05/1996	WD	Q	I		90,700
GRANTOR: CORRIE SHAWN M & DESI						
GRANTEE: TAYLOR FRANK V						

BUILDING NOTES

BUILDING DIMENSIONS

SFB=[YR=2016] W22 S15 FEP=[YR=2016] W19 S9 BAS=[YR=1993] W29 S24 E28 FOP=[YR=1993] S4 E8 N4 W8$ E20 N24 W19$ E19 N9$ S9 E22 N24$ PTR=E15 FUS=[YR=1993] E48 S12 W48 N12$ W15$.

EXTRA FEATURES

LN	OB/XF CODE	DESCRIPTION	BLD	CAP	L	W	UNITS	UT	Adj R	ADJ UNIT PRICE	ORIG COND	YEAR ON	YEAR ACTUAL	Q	% COND	OB/XF MKT VALUE	NOTES
1	0500	FP-PRE FAB	0	100	0	0	1.00	UT	3,500.00	3,500.00	100	1980	1980	3	46.5	1,628	
2	0810	CONCRETE A	0	100	0	0	368.00	SF	6.50	6.50	100	1980	1980	3	32.5	777	
3	1242	WD DECK A	0	100	0	0	528.00	SF	10.00	10.00	100	1980	1980	3	20	1,056	
4	0940	SHEDS/PORT	0	100	20	12	240.00	SF	27.00	27.00	100	2000	2000	3	20	1,296	

LAND DESCRIPTION

TOTAL OB/XF 4,757

LN	USE CODE	CLS	LAND USE DESCRIPTION	CAP	RD	LOC ZONE	FRONT	DEPTH	TOT LND UTS	UNIT TYPE	DT	DPTH FACT	% COND	TOT ADJ	UNIT PRICE	ADJ UNIT PRICE	LAND VALUE	OTHER ADJUSTMENTS AND NOTES	YEAR	DENSITY	DECL	FRZ	YR	CONSRV
1	000100	C	SFR	100		OR	0.00	0.00	1.00	LT		1.00	1.00	1.00	80,000.00	80,000.00	80,000							

REVIEW DATE 05/12/2019 BY KBA Total Acres: 0.00 Total Land Value: 80,000 Market: 0 Agricultural: 0 Common: 80,000 PRINTED 08/06/2024 BY SYS