PT OF LOTS 34 & 36
IN OR 2101/788
THIGPEN SURVEY DBK 39/356

GRAY LUKE J & DONNA NICOLE
87638 ROSES BLUFF RD
YULEE, FL 32097

2024

42-3N-28-5080-0034-0010

BUILDING CHARACTERISTICS

ELEMENT	CD	CONSTRUCTION
Exterior Wall	05	AVERAGE 100
Roof Structur	03	GABLE/HIP 100
Roof Cover	03	COMP SHNGL 100
Interior Wall	05	DRYWALL 100
Interior Floo	08	SHT VINYL 50
Interior Floo	14	CARPET 50
Air Condition	03	CENTRAL 100
Heating Type	04	AIR DUCTED 100
Bedrooms		13 100
Bathrooms		6 100
Frame	02	WOOD FRAME 100
Stories	2.	2. 100
Units		0 100
Occupancy	00	NONE 100
Quality	04	Quality Level 04

DOR CODE 0100 SINGLE FAMILY
MAP NUM | MKT AREA 04
NEIGHBORHOOD/LOC 4031.00

AREA TYPE	TOTAL GROSS AREA	PCT OF BASE	TOT ADJ AREA	SUBAREA MARKET VALUE
BAS	2,695	100	2,695	229,608
FEP	288	80	230	19,595
FGR	784	55	431	36,721
FOP	30	30	9	767
FST	49	55	27	2,300
FUS	2,344	100	2,344	199,704
UBM	1,568	20	314	26,752
UDU	288	55	158	13,462
UST	392	45	176	14,995
TOTALS	8,438		6,384	543,905

MARKET ADJUSTMENTS

TYPE	MDL	EFF. AREA	TOT ADJ PTS	EFF. BASE RATE	REPL. COST NEW	AYB	EYB	ECON	FNCT		NORM	% COND
0100	01	6,384	107.7300	102.34	653,339	1985	1985	0	0	0	16.75	83.25

1 SINGLE FAM – 100% - 2018 Heated Area: 5039 HX Base Yr 2018

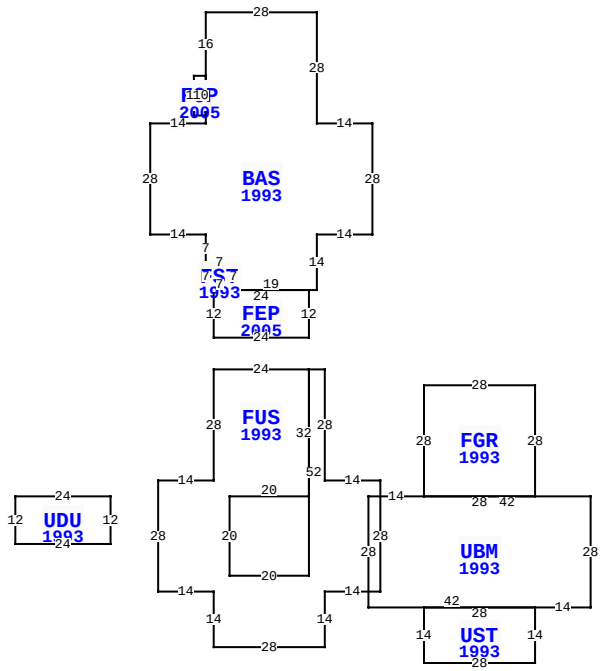

87638 ROSES BLUFF RD, YULEE

BLD DATE		LGL DATE	
XF DATE		LAND DATE	06/20/2023 MLU
INC DATE		AG DATE	

NASSAU COUNTY PROPERTY

PAGE 1 of 1 4

VALUATION SUMMARY

VALUATION BY		STANDARD
Tax Group: 4	Tax Dist:	
BUILDING MARKET VALUE		543,905
TOTAL MARKET OB/XF VALUE		0
TOTAL LAND VALUE - MARKET		245,468
TOTAL MARKET VALUE		789,373
SOH/AGL Deduction		295,396
ASSESSED VALUE		493,977
TOTAL EXEMPTION VALUE	HX HB	50,000
BASE TAXABLE VALUE		443,977
TOTAL JUST VALUE		789,373
NCON VALUE		0
INCOME VALUE		
PREVIOUS YEAR MKT VALUE		763,766

PERMIT NUM	DESCRIPTION	AMT	ISSUED

SALES DATA

OFF RECORD Number	DATE	TYPE INST	Q U	V I	RSN CD	SALE PRICE
2101/0788	12/23/2016	SW	U	I	12	187,000
GRANTOR: NATIONSTAR MORTGAGE L						
GRANTEE: GRAY LUKE J & DONNA						
2020/0899	12/28/2015	CT	U	I	18	100
GRANTOR: CLERK OF COURT						
GRANTEE: NATIONSTAR MORTGAGE						

BUILDING NOTES

BUILDING DIMENSIONS

FUS=[YR=1993] N32 W24 S28 W14 S28 E14 S14 E28 N14 E14 N28 W14 N28 W4 S52 W20 N20 E20 $ PTR= E15 UBM=[YR=1993] E14 FGR=[YR=1993] N28 E28 S28 W28 $ E42 S28 W14 UST=[YR=1993] S14 W28 N14 E28 $ W42 N28 $ W15 $ PTR= N40 FEP=[YR=2005] N12 BAS=[YR=1993] E2 N14 E14 N28 W14 N28 W28 S16 FOP=[YR=2005] W3 S10 E3 N10 $ S12 W14 S28 E14 S7 FST=[YR=1993] S7 E7 N7 W7 $ E7 S7 E19 $ W24 S12 E24 $ S40 $ PTR= W50 UDU=[YR=1993] W24 S12 E24 N12 $ E50 $.

EXTRA FEATURES

L N	OB/XF CODE	DESCRIPTION	BLD	CAP	L	W	UNITS	UT	Adj R	ADJ UNIT PRICE	ORIG COND	YEAR ON	YEAR ACTUAL	Q	% COND	OB/XF MKT VALUE	NOTES

LAND DESCRIPTION

TOTAL OB/XF 0

L N	USE CODE	CLS	LAND USE DESCRIPTION	CAP	R D	LOC ZONE	FRONT	DEPTH	TOT LND UTS	UNIT TYPE	D T	DPTH FACT	% COND	TOT ADJ	UNIT PRICE	ADJ UNIT PRICE	LAND VALUE	OTHER ADJUSTMENTS AND NOTES	YEAR	DENSITY	DECL	FRZ	YR	CONSRV
1	000115	C	SFR ACRES	100		OR	0.00	0.00	4.72	AC		1.00	1.00	0.65	80,000.00	52,000.00	245,440							
2	009400	C	RIGHTOFWAY	0		OR	0.00	0.00	0.28	AC		1.00	1.00	1.00	100.00	100.00	28							

REVIEW DATE 01/24/2023 BY DJA Total Acres: 5.00 Total Land Value: 245,468 Market: 0 Agricultural: 0 Common: 245,468 PRINTED 08/06/2024 BY SYS