PT OF LOT 28
IN OR 1949/1372
THIGPEN SURVEY DBK 39/356

GOODWIN HAROLD A JR & KATHRINE
87626 ROSES BLUFF RD
YULEE, FL 32097

2024

42-3N-28-5080-0028-0050

BUILDING CHARACTERISTICS

ELEMENT	CD	CONSTRUCTION
Exterior Wall	23	REINF CONC 100
Roof Structur	03	GABLE/HIP 100
Roof Cover	03	COMP SHNGL 100
Interior Wall	05	DRYWALL 100
Interior Floo	11	CLAY TILE 50
Interior Floo	14	CARPET 50
Air Condition	03	CENTRAL 100
Heating Type	04	AIR DUCTED 100
Bedrooms		4 100
Bathrooms		4 100
Frame	04	REIN CONC 100
Stories	1.5	1.5 100
Units		0 100
Occupancy	00	NONE 100
Quality	06	Quality Level 06
DOR CODE	0100	SINGLE FAMILY
MAP NUM		MKT AREA 04
NEIGHBORHOOD/LOC	4031.00	

AREA TYPE	TOTAL GROSS AREA	PCT OF BASE	TOT ADJ AREA	SUBAREA MARKET VALUE
BAL	105	15	16	1,733
BAS	2,762	100	2,762	299,259
FGR	870	55	478	51,790
FOP	110	30	33	3,575
FOP	176	30	53	5,743
FUS	720	100	720	78,010
PTO	360	5	18	1,950
STR	18	10	2	217
STR	27	10	3	325
UOP	64	20	13	1,409
TOTALS	5,212		4,098	444,011

MARKET ADJUSTMENTS

TYPE	MDL	EFF. AREA	TOT ADJ PTS	EFF. BASE RATE	REPL. COST NEW	AYB	EYB	ECON	FNCT		NORM	% COND
0100	01	4,098	123.9700	117.77	482,621	2006	2007	0	0	0	8.00	92.00

1 SINGLE FAM – 100% - 2015 Heated Area: 3482 HX Base Yr 2015

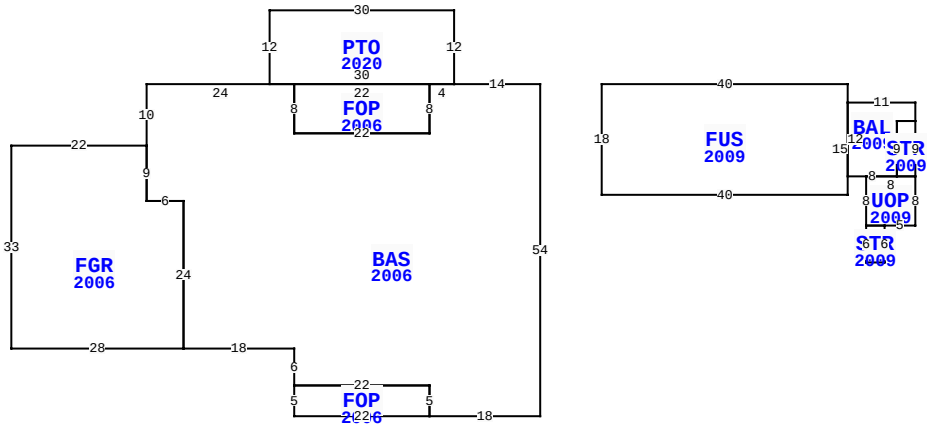

87626 ROSES BLUFF RD, YULEE

BLD DATE	02/23/2015 KK	LGL DATE	
XF DATE		LAND DATE	06/20/2023 MLU
INC DATE		AG DATE	

NASSAU COUNTY PROPERTY

PAGE 1 of 2 4

VALUATION SUMMARY

VALUATION BY		STANDARD
Tax Group: 4	Tax Dist:	
BUILDING MARKET VALUE		468,071
TOTAL MARKET OB/XF VALUE		19,038
TOTAL LAND VALUE - MARKET		80,000
TOTAL MARKET VALUE		567,109
SOH/AGL Deduction		239,105
ASSESSED VALUE		328,004
TOTAL EXEMPTION VALUE	HX HB VX	55,000
BASE TAXABLE VALUE		273,004
TOTAL JUST VALUE		567,109
NCON VALUE		0
INCOME VALUE		
PREVIOUS YEAR MKT VALUE		547,991

PERMIT NUM	DESCRIPTION	AMT	ISSUED
B1908997	SCRN ENCLSR	15,000	11/01/2019
B1702899	GARAGE	54,108	05/01/2017
B22264	ADDITION	47,520	01/14/2010
C14491	CO ISSUED	210,166	02/07/2005
B14491	NEW CONSTR	210,166	02/07/2005

SALES DATA

OFF RECORD Number	DATE	TYPE INST	Q / U	V / I	RSN CD	SALE PRICE
1949/1372	11/24/2014	WD	Q	I	02	288,000
GRANTOR: MYER ERIC L & CHERYL						
GRANTEE: GOODWIN HAROLD A JR						
1546/0518	1/15/2008	WD	U	I	07	100
GRANTOR: ALVARE CHARLES BRYAN						
GRANTEE: MYER ERIC L & CHERY						

BUILDING NOTES

BUILDING DIMENSIONS

BAS=[YR=2006] W14 PTO=[YR=2020] N12 W30 S12 E30$ W4 FOP=[YR=2006] W22 S8 E22 N8 $S8 W22 N8 W24 S10 FGR=[YR=2006] W22S33 E28 N24 W6 N9 $ S9 E6 S24 E18 S6 FOP=[YR=2006] S5 E22 N5 W22 $ E22 S5 E18 N54 $ PTR=[YR=2009] E10 FUS=[YR=2009] E40 S3 BAL=[YR=2009] E11 S3STR=[YR=2009] S9 UOP=[YR=2009] S8 W5 STR=[YR=2009] S6 W3 N6 E3$ W3N8 E8$ W3 N9 E3$ W3 S9 W8 N12$ S15 W40 N18$ W10$.

EXTRA FEATURES

LN	OB/XF CODE	DESCRIPTION	BLD	CAP	L	W	UNITS	UT	Adj R	ADJ UNIT PRICE	ORIG COND	YEAR ON	YEAR ACTUAL	Q	% COND	OB/XF MKT VALUE	NOTES
1	0811	CONCRETE B	0	100	0	0	996.00	SF	5.20	5.20	100	2006	2006	3	87	4,506	
2	1076	TRELLIS A	0	100	0	0	176.00	SF	7.50	7.50	100	2006	2006	3	44	581	
3	0504	FP-ELECTRI	0	100	0	0	1.00	UT	2,000.00	2,000.00	100	2006	2006	3	90	1,800	
4	0525	GAZEBO	0	100	0	0	1.00	UT	7,500.00	7,500.00	100	2015	2015	3	78	5,850	
5	0810	CONCRETE A	0	100	10	10	100.00	SF	6.50	6.50	100	2017	2017	3	97	631	
6	0911	SCRN RM A	0	100	30	12	360.00	SF	17.50	17.50	100	2020	2020	3	90	5,670	

LAND DESCRIPTION

TOTAL OB/XF 19,038

LN	USE CODE	CLS	LAND USE DESCRIPTION	CAP	RD	LOC ZONE	FRONT	DEPTH	TOT LND UTS	UNIT TYPE	DT	DPTH FACT	% COND	TOT ADJ	UNIT PRICE	ADJ UNIT PRICE	LAND VALUE	OTHER ADJUSTMENTS AND NOTES	YEAR	DENSITY	DECL	FRZ	YR	CONSRV
1	000115	C	SFR ACRES	100	0006	OR	0.00	0.00	1.00	AC		1.00	1.00	1.00	80,000.00	80,000.00	80,000							

REVIEW DATE 10/08/2020 BY KW Total Acres: 1.00 Total Land Value: 80,000 Market: 0 Agricultural: 0 Common: 80,000 PRINTED 08/06/2024 BY SYS

PT OF LOT 28
IN OR 1949/1372
THIGPEN SURVEY DBK 39/356

GOODWIN HAROLD A JR & KATHRINE
87626 ROSES BLUFF RD
YULEE, FL 32097

2024

42-3N-28-5080-0028-0050

NASSAU COUNTY PROPERTY

BUILDING CHARACTERISTICS

ELEMENT	CD	CONSTRUCTION
Exterior Wall	25	MOD METAL 100
Roof Structur	10	STEEL FRME 100
Roof Cover	12	MODULAR MT 100
Interior Wall	07	NONE 100
Interior Floo	03	CONC FINSH 100
Air Condition	01	NONE 100
Heating Type	01	NONE 100
Bedrooms		0 100
Bathrooms		0 100
Frame	05	STEEL 100
Stories	1.	1. 100
Units		0 100
Occupancy	00	NONE 100
Quality	06	Quality Level 06

DOR CODE 0100 SINGLE FAMILY
MAP NUM | MKT AREA 04
NEIGHBORHOOD/LOC 4031.00

AREA TYPE	TOTAL GROSS AREA	PCT OF BASE	TOT ADJ AREA	SUBAREA MARKET VALUE
BAS	1,200	100	1,200	24,060
TOTALS	1,200		1,200	24,060

MARKET ADJUSTMENTS

TYPE	MDL	EFF. AREA	TOT ADJ PTS	EFF. BASE RATE	REPL. COST NEW	AYB	EYB	ECON	FNCT		NORM	% COND
6500	01	1,200	60.9500	21.33	25,596	2017	2017	0	0	0	6.00	94.00

2 GARAGE RES – 100% - 2015 Heated Area: 1200 HX Base Yr 2015

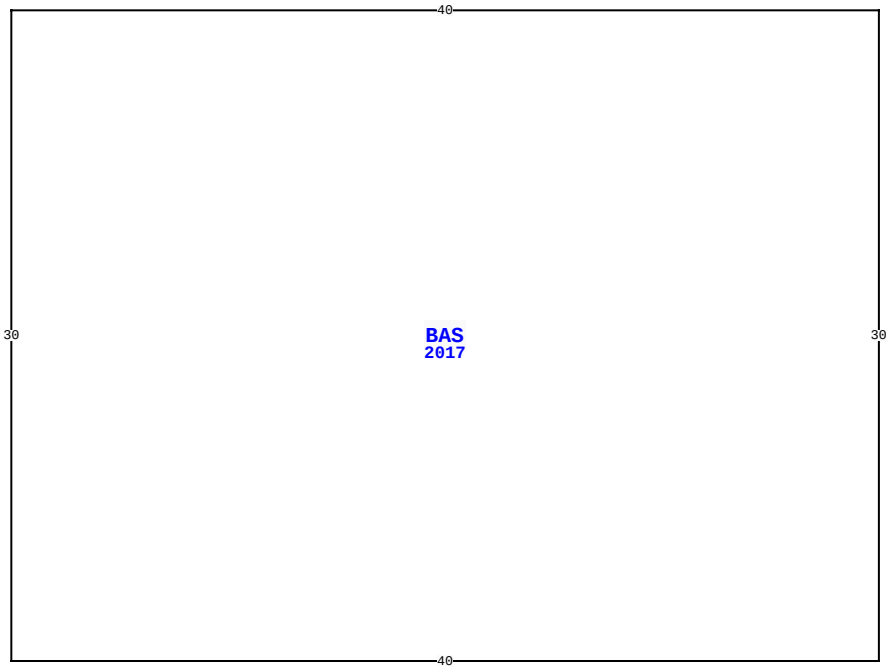

87626 ROSES BLUFF RD, YULEE

BLD DATE	02/23/2015 KK	LGL DATE	
XF DATE		LAND DATE	06/20/2023 MLU
INC DATE		AG DATE	

VALUATION SUMMARY

VALUATION BY		STANDARD
Tax Group: 4	Tax Dist:	
BUILDING MARKET VALUE		468,071
TOTAL MARKET OB/XF VALUE		19,038
TOTAL LAND VALUE - MARKET		80,000
TOTAL MARKET VALUE		567,109
SOH/AGL Deduction		239,105
ASSESSED VALUE		328,004
TOTAL EXEMPTION VALUE	HX HB VX	55,000
BASE TAXABLE VALUE		273,004
TOTAL JUST VALUE		567,109
NCON VALUE		0
INCOME VALUE		
PREVIOUS YEAR MKT VALUE		547,991

PERMIT NUM	DESCRIPTION	AMT	ISSUED

SALES DATA

OFF RECORD Number	DATE	TYPE INST	Q / U	V / I	RSN CD	SALE PRICE
1949/1372	11/24/2014	WD	Q	I	02	288,000
GRANTOR: MYER ERIC L & CHERYL						
GRANTEE: GOODWIN HAROLD A JR						
1546/0518	1/15/2008	WD	U	I	07	100
GRANTOR: ALVARE CHARLES BRYAN						
GRANTEE: MYER ERIC L & CHERY						

BUILDING NOTES

BUILDING DIMENSIONS

BAS=[YR=2017] W40 S30 E40 N30$.

EXTRA FEATURES

L N	OB/XF CODE	DESCRIPTION	BLD	CAP	L	W	UNITS	UT	Adj R	ADJ UNIT PRICE	ORIG COND	YEAR ON	YEAR ACTUAL	Q	% COND	OB/XF MKT VALUE	NOTES

LAND DESCRIPTION

TOTAL OB/XF 0

L N	USE CODE	CLS	LAND USE DESCRIPTION	CAP	R D	LOC ZONE	FRONT	DEPTH	TOT LND UTS	UNIT TYPE	D T	DPTH FACT	% COND	TOT ADJ	UNIT PRICE	ADJ UNIT PRICE	LAND VALUE	OTHER ADJUSTMENTS AND NOTES	YEAR	DENSITY	DECL	FRZ	YR	CONSRV

REVIEW DATE 10/08/2020 BY KW Total Acres: 1.00 Total Land Value: 80,000 Market: 0 Agricultural: 0 Common: 80,000 PRINTED 08/06/2024 BY SYS