LOT 4
IN OR 1884/1022
ROSES BLUFF SUB PB 7/110

KOSHAR THOMAS & REGINA
97676 BLUFF VIEW CR
YULEE, FL 32097

2024

42-3N-28-1870-0004-0000

BUILDING CHARACTERISTICS

ELEMENT	CD	CONSTRUCTION
Exterior Wall	31	HARDIE BRD 70
Exterior Wall	16	WD FR STUC 30
Roof Structur	03	GABLE/HIP 100
Roof Cover	03	COMP SHNGL 100
Interior Wall	05	DRYWALL 100
Interior Floo	14	CARPET 70
Interior Floo	11	CLAY TILE 30
Air Condition	03	CENTRAL 100
Heating Type	04	AIR DUCTED 100
Bedrooms		3 100
Bathrooms		2 100
Frame	02	WOOD FRAME 100
Stories	2.	2. 100
Units		0 100
Occupancy	00	NONE 100
Quality	01	Quality Level 01
DOR CODE	0100	SINGLE FAMILY
MAP NUM		MKT AREA 04
NEIGHBORHOOD/LOC	4063.00	

AREA TYPE	TOTAL GROSS AREA	PCT OF BASE	TOT ADJ AREA	SUBAREA MARKET VALUE
BAS	2,156	100	2,156	246,217
FGR	480	55	264	30,149
FOP	36	30	11	1,256
FSP	120	40	48	5,482
TOTALS	2,792		2,479	283,104

MARKET ADJUSTMENTS

TYPE	MDL	EFF. AREA	TOT ADJ PTS	EFF. BASE RATE	REPL. COST NEW	AYB	EYB	ECON	FNCT		NORM	% COND
0900	01	2,479	95.8176	119.77	296,910	2013	2013	0	0	0	4.65	95.35

1 SNGL FAM – 100% - 2014 Heated Area: 2156 HX Base Yr 2014

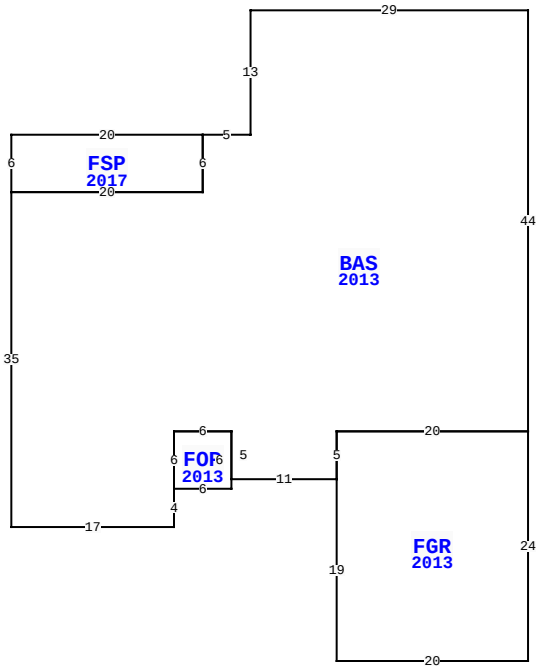

BLD DATE	03/03/2023 NW	LGL DATE	
XF DATE		LAND DATE	06/15/2023 MLU
INC DATE		AG DATE	

97676 BLUFF VIEW CIR, YULEE

NASSAU COUNTY PROPERTY

PAGE 1 of 1 4

VALUATION SUMMARY

VALUATION BY		STANDARD
Tax Group: 4	Tax Dist:	
BUILDING MARKET VALUE		283,104
TOTAL MARKET OB/XF VALUE		2,542
TOTAL LAND VALUE - MARKET		75,000
TOTAL MARKET VALUE		360,646
SOH/AGL Deduction		182,262
ASSESSED VALUE		178,384
TOTAL EXEMPTION VALUE	HX HB	50,000
BASE TAXABLE VALUE		128,384
TOTAL JUST VALUE		360,646
NCON VALUE		0
INCOME VALUE		
PREVIOUS YEAR MKT VALUE		347,924

PERMIT NUM	DESCRIPTION	AMT	ISSUED
B1326960	CO ISSUED	0	09/05/2013
B1327110	ADDITION	0	05/01/2013
P1316479	NEW CONSTR	0	03/01/2013

SALES DATA

OFF RECORD Number	DATE	TYPE INST	Q / U	V / I	RSN CD	SALE PRICE
1884/1022	10/03/2013	SW	Q	I	02	188,900
GRANTOR: D R HORTON INC-JACKSO						
GRANTEE: KOSHAR THOMAS & REG						
1709/1605	11/10/2010	QC	U	I	11	100
GRANTOR: ROSE'S BLUFF HOMEOWNE						
GRANTEE: D R HORTON INC						

BUILDING NOTES

BUILDING DIMENSIONS

BAS=[YR=2013] W29 S13 W5 FSP=[YR=2017] W20 S6 E20 N6 $ S6 W20 S35 E17 N4 FOP=[YR=2013] E6 N6 W6 S6 $ N6 E6 S5 E11 FGR=[YR=2013] S19 E20 N24 W20 S5 $ N5 E20 N44 $.

EXTRA FEATURES

LN	OB/XF CODE	DESCRIPTION	BLD	CAP	L	W	UNITS	UT	Adj R	ADJ UNIT PRICE	ORIG COND	YEAR ON	YEAR ACTUAL	Q	% COND	OB/XF MKT VALUE	NOTES
1	0811	CONCRETE B	0	100	0	0	520.00	SF	5.20	5.20	100	2013	2013	3	94	2,542	

LAND DESCRIPTION

TOTAL OB/XF 2,542

LN	USE CODE	CLS	LAND USE DESCRIPTION	CAP	RD	LOC ZONE	FRONT	DEPTH	TOT LND UTS	UNIT TYPE	DT	DPTH FACT	% COND	TOT ADJ	UNIT PRICE	ADJ UNIT PRICE	LAND VALUE	OTHER ADJUSTMENTS AND NOTES	YEAR	DENSITY	DECL	FRZ	YR	CONSRV
1	000100	C	SFR	100		RSF-1	0.00	0.00	1.00	LT		1.00	1.00	1.00	75,000.00	75,000.00	75,000							

REVIEW DATE 05/12/2019 BY KBA Total Acres: 0.00 Total Land Value: 75,000 Market: 0 Agricultural: 0 Common: 75,000 PRINTED 08/06/2024 BY SYS