LOT 2
IN OR 1785/96
ESMT PT OR 1389/643

EDWARDS DAVID A JR & HEATHER M
97704 BLUFF VIEW CR
YULEE, FL 32097

2024

42-3N-28-1870-0002-0000

NASSAU COUNTY PROPERTY

BUILDING CHARACTERISTICS

ELEMENT	CD	CONSTRUCTION
Exterior Wall	31	HARDIE BRD 70
Exterior Wall	16	WD FR STUC 30
Roof Structur	03	GABLE/HIP 100
Roof Cover	03	COMP SHNGL 100
Interior Wall	05	DRYWALL 100
Interior Floo	14	CARPET 70
Interior Floo	11	CLAY TILE 30
Air Condition	03	CENTRAL 100
Heating Type	04	AIR DUCTED 100
Bedrooms		5 100
Bathrooms		4 100
Frame	02	WOOD FRAME 100
Stories	2.	2. 100
Units		0 100
Occupancy	00	NONE 100
Quality	01	Quality Level 01
DOR CODE	0100	SINGLE FAMILY
MAP NUM		MKT AREA 04
NEIGHBORHOOD/LOC	4063.00	

AREA TYPE	TOTAL GROSS AREA	PCT OF BASE	TOT ADJ AREA	SUBAREA MARKET VALUE
BAS	2,301	100	2,301	258,175
FGR	450	55	248	27,826
FOP	25	30	8	897
FOP	117	30	35	3,927
FST	70	55	38	4,264
FUS	399	100	399	44,768
TOTALS	3,362		3,029	339,857

MARKET ADJUSTMENTS

TYPE	MDL	EFF. AREA	TOT ADJ PTS	EFF. BASE RATE	REPL. COST NEW	AYB	EYB	ECON	FNCT		NORM	% COND
0900	01	3,029	95.1372	118.92	360,209	2011	2011	0	0	0	5.65	94.35

1 SNGL FAM – 100% - 2018 Heated Area: 2700 HX Base Yr 2018

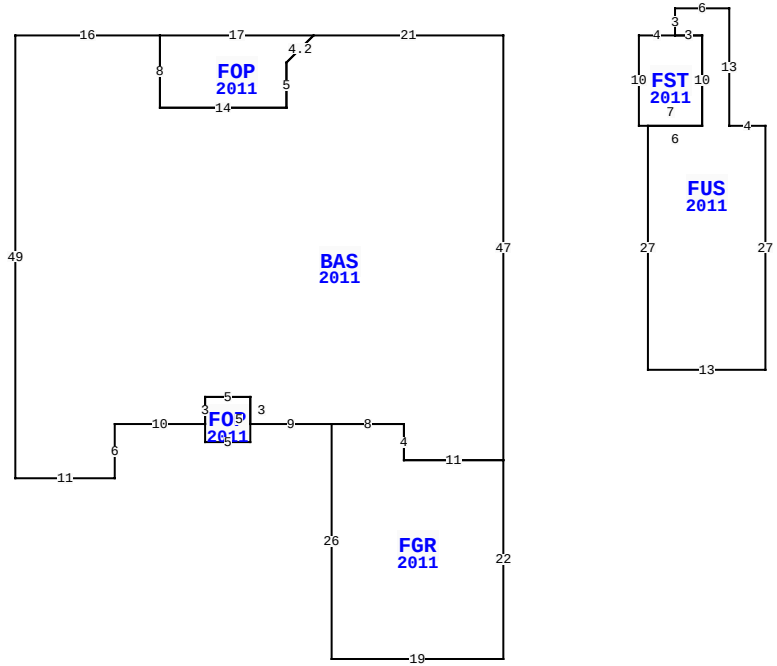

97704 BLUFF VIEW CIR, YULEE

BLD DATE	03/03/2023 NW	LGL DATE	
XF DATE		LAND DATE	06/15/2023 MLU
INC DATE		AG DATE	

NASSAU COUNTY PROPERTY — VALUATION SUMMARY

VALUATION BY		STANDARD
Tax Group: 4	Tax Dist:	
BUILDING MARKET VALUE		339,857
TOTAL MARKET OB/XF VALUE		5,506
TOTAL LAND VALUE - MARKET		75,000
TOTAL MARKET VALUE		420,363
SOH/AGL Deduction		151,700
ASSESSED VALUE		268,663
TOTAL EXEMPTION VALUE	HX HB	50,000
BASE TAXABLE VALUE		218,663
TOTAL JUST VALUE		420,363
NCON VALUE		0
INCOME VALUE		
PREVIOUS YEAR MKT VALUE		405,158

PERMIT NUM	DESCRIPTION	AMT	ISSUED
B24843	CO ISSUED	0	11/21/2011
E23679	NEW CONSTR	0	08/01/2011
M16482	H/AC	0	08/01/2011
P14855	NEW CONSTR	0	06/01/2011
B24843	NEW CONSTR	294,763	06/01/2011

SALES DATA

OFF RECORD Number	DATE	TYPE INST	Q U	V I	RSN CD	SALE PRICE
1949/0413	11/04/2014	QC	U	I	11	100
GRANTOR: DRH ENERGY INC						
GRANTEE: EDWARDS DAVID A JR						
1785/0096	3/22/2012	WD	Q	I	02	214,000
GRANTOR: D R HORTON INC-JACKSO						
GRANTEE: EDWARDS DAVID A JR						

BUILDING NOTES

EXTRA FEATURES

LN	OB/XF CODE	DESCRIPTION	BLD	CAP	L	W	UNITS	UT	Adj R	ADJ UNIT PRICE	ORIG COND	YEAR ON	YEAR ACTUAL	Q	% COND	OB/XF MKT VALUE	NOTES
1	0812	CONCRETE C	0	100	0	0	1,462.00	SF	4.00	4.00	100	2011	2011	3	92	5,380	
2	0810	CONCRETE A	0	100	7	3	21.00	SF	6.50	6.50	100	2011	2011	3	92	126	

BUILDING DIMENSIONS

BAS=[YR=2011] W21 FOP=[YR=2011] W17 S8 E14 N5 U3 R3 $ L3 D3 S5 W14 N8 W16 S49 E11 N6 E10 FOP=[YR=2011] S2 E5 N5 W5 S3$ N3 E5 S3 E9 FGR=[YR=2011] S26 E19 N22 W11 N4 W8 $ E8 S4 E11 N47$ PTR= E15 FST=[YR=2011] E4 FUS=[YR=2011] N3 E6 S13 E4 S27 W13 N27 E6 N10 W3$ E3 S10 W7 N10$ W15$.

LAND DESCRIPTION

TOTAL OB/XF 5,506

LN	USE CODE	CLS	LAND USE DESCRIPTION	CAP	RD	LOC ZONE	FRONT	DEPTH	TOT LND UTS	UNIT TYPE	DT	DPTH FACT	% COND	TOT ADJ	UNIT PRICE	ADJ UNIT PRICE	LAND VALUE	OTHER ADJUSTMENTS AND NOTES	YEAR	DENSITY	DECL	FRZ	YR	CONSRV
1	000100	C	SFR	100	0003	RSF-1	0.00	0.00	1.00	LT		1.00	1.00	1.00	75,000.00	75,000.00	75,000							

REVIEW DATE 05/12/2019 BY KBA Total Acres: 0.00 Total Land Value: 75,000 Market: 0 Agricultural: 0 Common: 75,000 PRINTED 08/06/2024 BY SYS