LOT 38
VILLAGES OF WOODBRIDGE PHASE 5
OR 2554/1700

BROWN RAMONA ANN
95424 CORSICA CT
FERNANDINA BEACH, FL 32034

2024

42-2N-28-1142-0038-0000

BUILDING CHARACTERISTICS

ELEMENT	CD	CONSTRUCTION
Exterior Wall	31	HARDIE BRD 100
Roof Structur	03	GABLE/HIP 100
Roof Cover	03	COMP SHNGL 100
Interior Wall	05	DRYWALL 100
Interior Floo	13	LVT/LAMNT 50
Interior Floo	14	CARPET 50
Air Condition	03	CENTRAL 100
Heating Type	04	AIR DUCTED 100
Bedrooms		4 100
Bathrooms		2 100
Frame	02	WOOD FRAME 100
Stories	1.	1. 100
Units		0 100
Quality	05	Quality Level 05

DOR CODE 0100 SINGLE FAMILY
MAP NUM | MKT AREA 04
NEIGHBORHOOD/LOC 4068.200

AREA TYPE	TOTAL GROSS AREA	PCT OF BASE	TOT ADJ AREA	SUBAREA MARKET VALUE
BAS	1,816	100	1,816	204,572
FGR	661	55	364	41,005
FOP	24	30	7	789
FOP	224	30	67	7,548
TOTALS	2,725		2,254	253,913

MARKET ADJUSTMENTS

TYPE	MDL	EFF. AREA	TOT ADJ PTS	EFF. BASE RATE	REPL. COST NEW	AYB	EYB	ECON	FNCT		NORM	% COND
0100	01	2,254	118.5800	112.65	253,913	2023	2023	0	0	0	0.00	100.00

1 SINGLE FAM – 0% - 2024 Heated Area: 1816 HX Base Yr

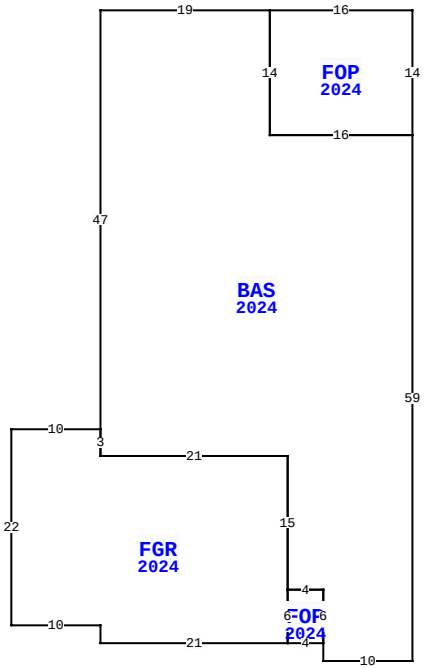

95424 CORSICA CT, FERNANDINA BEACH

BLD DATE		LGL DATE	
XF DATE		LAND DATE	05/18/2023 MLU
INC DATE		AG DATE	

NASSAU COUNTY PROPERTY

PAGE 1 of 1 4

VALUATION SUMMARY

VALUATION BY	STANDARD
Tax Group: 4	Tax Dist:
BUILDING MARKET VALUE	253,913
TOTAL MARKET OB/XF VALUE	4,118
TOTAL LAND VALUE - MARKET	75,000
TOTAL MARKET VALUE	333,031
SOH/AGL Deduction	0
ASSESSED VALUE	333,031
TOTAL EXEMPTION VALUE	0
BASE TAXABLE VALUE	333,031
TOTAL JUST VALUE	333,031
NCON VALUE	258,031
INCOME VALUE	
PREVIOUS YEAR MKT VALUE	75,000

PERMIT NUM	DESCRIPTION	AMT	ISSUED
22016346	NEW CONSTR	302,203	10/31/2022
220008192			

SALES DATA

OFF RECORD Number	DATE	TYPE INST	Q U	V I	RSN CD	SALE PRICE
2691/181	1/23/2024	SW	Q	I	01	420,000
GRANTOR: RICHMOND AMERICAN HOM						
GRANTEE: BROWN RAMONA ANN						
2598/0618	10/20/2022	SW	Q	V	05	728,400
GRANTOR: WOODBRIDGE NASSAU LLC						
GRANTEE: RICHMOND AMERICAN H						

BUILDING NOTES

EXTRA FEATURES

L N	OB/XF CODE	DESCRIPTION	BLD	CAP	L	W	UNITS	UT	Adj R	ADJ UNIT PRICE	ORIG COND	YEAR ON	YEAR ACTUAL	Q	% COND	OB/XF MKT VALUE	NOTES
1	0811	CONCRETE B	0	0	0	0	792.00	SF	5.20	5.20	100	2024	2023		100	4,118	

BUILDING DIMENSIONS

BAS=[YR=2024;ORIG=80,10] W16 N14 W19 S47 S3 E21 S15 E4 S6 S2 E10 N59 $
FOP=[YR=2024;ORIG=64,-4] E16 S14 W16 N14 $
FGR=[YR=2024;ORIG=45,46] E21 S15 S6 W21 N2 W10 N22 E10 S3 $
FOP=[YR=2024;ORIG=66,61] E4 S6 W4 N6 $
.

LAND DESCRIPTION

TOTAL OB/XF 4,118

L N	USE CODE	CLS	LAND USE DESCRIPTION	CAP	R D	LOC ZONE	FRONT	DEPTH	TOT LND UTS	UNIT TYPE	D T	DPTH FACT	% COND	TOT ADJ	UNIT PRICE	ADJ UNIT PRICE	LAND VALUE	OTHER ADJUSTMENTS AND NOTES	YEAR	DENSITY	DECL	FRZ	YR	CONSRV
1	000134	C	SFR POND	0		PUD	0.00	0.00	1.00	LT		1.00	1.00	1.00	75,000.00	75,000.00	75,000							

REVIEW DATE 11/27/2023 BY DJ Total Acres: 0.00 Total Land Value: 75,000 Market: 0 Agricultural: 0 Common: 75,000 PRINTED 08/06/2024 BY SYS