LOT 34
VILLAGES OF WOODBRIDGE PHASE 5
OR 2554/1700

DAVIDSON KIMBERLY ANNE
95445 CORSICA CT
FERNANDINA BEACH, FL 32034

2024

42-2N-28-1142-0034-0000

BUILDING CHARACTERISTICS

ELEMENT	CD	CONSTRUCTION
Exterior Wall	31	HARDIE BRD 100
Roof Structur	03	GABLE/HIP 100
Roof Cover	03	COMP SHNGL 100
Interior Wall	05	DRYWALL 100
Interior Floo	13	LVT/LAMNT 50
Interior Floo	14	CARPET 50
Air Condition	03	CENTRAL 100
Heating Type	04	AIR DUCTED 100
Bedrooms		4 100
Bathrooms		2 100
Frame	02	WOOD FRAME 100
Stories	1.	1. 100
Quality	05	Quality Level 05
DOR CODE	0100	SINGLE FAMILY
MAP NUM		MKT AREA 04
NEIGHBORHOOD/LOC	4068.200	

AREA TYPE	TOTAL GROSS AREA	PCT OF BASE	TOT ADJ AREA	SUBAREA MARKET VALUE
BAS	1,816	100	1,816	204,572
FGR	661	55	364	41,005
FOP	24	30	7	789
FOP	224	30	67	7,548
TOTALS	2,725		2,254	253,913

MARKET ADJUSTMENTS

TYPE	MDL	EFF. AREA	TOT ADJ PTS	EFF. BASE RATE	REPL. COST NEW	AYB	EYB	ECON	FNCT		NORM	% COND
0100	01	2,254	118.5800	112.65	253,913	2023	2023	0	0	0	0.00	100.00

1 SINGLE FAM – 100% - 2024 Heated Area: 1816 HX Base Yr 2024

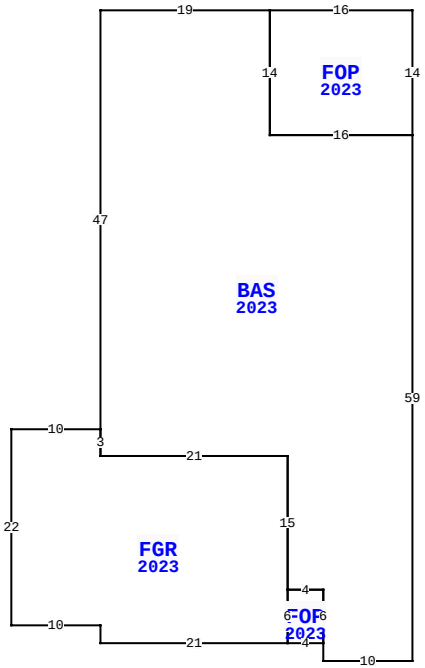

95445 CORSICA CT, FERNANDINA BEACH

BLD DATE		LGL DATE	
XF DATE		LAND DATE	05/18/2023 MLU
INC DATE		AG DATE	

NASSAU COUNTY PROPERTY

PAGE 1 of 1 4

VALUATION SUMMARY

VALUATION BY		STANDARD
Tax Group: 4	Tax Dist:	
BUILDING MARKET VALUE		253,913
TOTAL MARKET OB/XF VALUE		4,841
TOTAL LAND VALUE - MARKET		75,000
TOTAL MARKET VALUE		333,754
SOH/AGL Deduction		0
ASSESSED VALUE		333,754
TOTAL EXEMPTION VALUE	HX HB	50,000
BASE TAXABLE VALUE		283,754
TOTAL JUST VALUE		333,754
NCON VALUE		4,841
INCOME VALUE		
PREVIOUS YEAR MKT VALUE		75,000

PERMIT NUM	DESCRIPTION	AMT	ISSUED
22016356	NEW CONSTR	302,203	10/31/2022

SALES DATA

OFF RECORD Number	DATE	TYPE INST	Q / U	V / I	RSN CD	SALE PRICE
2675/1517	10/24/2023	QC	U	I	11	100
GRANTOR: DAVIDSON CHRISTOPHER						
GRANTEE: DAVIDSON KIMBERLY A						
2652/81	6/30/2023	SW	Q	I	02	393,500
GRANTOR: RICHMOND AMERICAN HOM						
GRANTEE: DAVIDSON CHRISTOPHE						

BUILDING NOTES

BUILDING DIMENSIONS

BAS=[YR=2023;ORIG=70,0] W16 N14 W19 S47 S3 E21 S15 E4 S6 S2 E10 N59 $
FOP=[YR=2023;ORIG=54,-14] E16 S14 W16 N14 $
FOP=[YR=2023;ORIG=56,51] E4 S6 W4 N6 $
FGR=[YR=2023;ORIG=25,33] E10 S3 E21 S15 S6 W21 N2 W10 N22 $
.

EXTRA FEATURES

LN	OB/XF CODE	DESCRIPTION	BLD	CAP	L	W	UNITS	UT	Adj R	ADJ UNIT PRICE	ORIG COND	YEAR ON	YEAR ACTUAL	Q	% COND	OB/XF MKT VALUE	NOTES
1	0811	CONCRETE B	0	100	0	0	931.00	SF	5.20	5.20	100	2023	2023		100	4,841	

LAND DESCRIPTION

TOTAL OB/XF 4,841

LN	USE CODE	CLS	LAND USE DESCRIPTION	CAP	RD	LOC ZONE	FRONT	DEPTH	TOT LND UTS	UNIT TYPE	DT	DPTH FACT	% COND	TOT ADJ	UNIT PRICE	ADJ UNIT PRICE	LAND VALUE	OTHER ADJUSTMENTS AND NOTES	YEAR	DENSITY	DECL	FRZ	YR	CONSRV
1	000100	C	SFR	100		PUD	0.00	0.00	1.00	LT		1.00	1.00	1.00	75,000.00	75,000.00	75,000							

REVIEW DATE 05/18/2023 BY MLU Total Acres: 0.00 Total Land Value: 75,000 Market: 0 Agricultural: 0 Common: 75,000 PRINTED 08/06/2024 BY SYS