LOT 86
VILLAGES OF WOODBRIDGE
PHASE IV B OR 2438/574

SPENCER TRISTAN R & RACHAEL L
94948 COLNAGO CT
FERNANDINA BEACH, FL 32034

2024

42-2N-28-1141-0086-0000

BUILDING CHARACTERISTICS

ELEMENT	CD	CONSTRUCTION
Exterior Wall	31	HARDIE BRD 100
Roof Structur	03	GABLE/HIP 100
Roof Cover	03	COMP SHNGL 100
Interior Wall	05	DRYWALL 100
Interior Floo	13	LVT/LAMNT 60
Interior Floo	14	CARPET 40
Air Condition	03	CENTRAL 100
Heating Type	04	AIR DUCTED 100
Bedrooms		3 100
Bathrooms		3 100
Frame	02	WOOD FRAME 100
Stories	1.	1. 100
Units		0 100
Occupancy	00	NONE 100
Quality	05	Quality Level 05
DOR CODE	0100	SINGLE FAMILY
MAP NUM		MKT AREA 04
NEIGHBORHOOD/LOC	4068.100	

AREA TYPE	TOTAL GROSS AREA	PCT OF BASE	TOT ADJ AREA	SUBAREA MARKET VALUE
BAS	1,601	100	1,601	185,604
FGR	581	55	320	37,098
FOP	48	30	14	1,623
FOP	160	30	48	5,565
TOTALS	2,390		1,983	229,889

MARKET ADJUSTMENTS

TYPE	MDL	EFF. AREA	TOT ADJ PTS	EFF. BASE RATE	REPL. COST NEW	AYB	EYB	ECON	FNCT		NORM	% COND
0100	01	1,983	122.0296	115.93	229,889	2022	2022	0	0	0	0.00	100.00

1 SINGLE FAM – 100% - 2023 Heated Area: 1601 HX Base Yr 2023

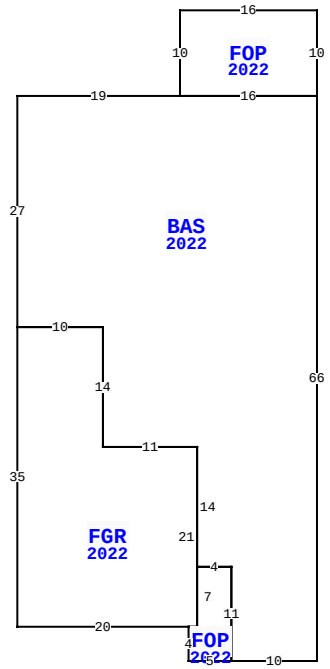

94948 COLNAGO CT, FERNANDINA BEACH

BLD DATE		LGL DATE	
XF DATE		LAND DATE	05/18/2023 MLU
INC DATE		AG DATE	

NASSAU COUNTY PROPERTY

PAGE 1 of 1 4

VALUATION SUMMARY

VALUATION BY		STANDARD
Tax Group: 4	Tax Dist:	
BUILDING MARKET VALUE		229,889
TOTAL MARKET OB/XF VALUE		3,609
TOTAL LAND VALUE - MARKET		75,000
TOTAL MARKET VALUE		308,498
SOH/AGL Deduction		23,037
ASSESSED VALUE		285,461
TOTAL EXEMPTION VALUE	HX HB	50,000
BASE TAXABLE VALUE		235,461
TOTAL JUST VALUE		308,498
NCON VALUE		0
INCOME VALUE		
PREVIOUS YEAR MKT VALUE		277,147

PERMIT NUM	DESCRIPTION	AMT	ISSUED
B2115868	NEW CONSTR	244,576	11/16/2021

SALES DATA

OFF RECORD Number	DATE	TYPE INST	Q / U	V / I	RSN CD	SALE PRICE
2592/0399	9/20/2022	SW	Q	I	01	348,600
GRANTOR: RICHMOND AMERICAN HOM						
GRANTEE: SPENCER TRISTAN ROB						
2513/0856	11/10/2021	SW	Q	V	05	580,200
GRANTOR: WOODBRIDGE NASSAU LLC						
GRANTEE: RICHMOND AMERICAN H						

BUILDING NOTES

BUILDING DIMENSIONS

FOP=[YR=2022] W16 S10 BAS=[YR=2022] W19 S27 FGR=[YR=2022] S35 E20 FOP=[YR=2022] S4 E5 N11 W4 S7 W1$ E1 N21 W11 N14 W10$ E10 S14 E11 S14 E4 S11 E10 N66 W16$ E16 N10$.

EXTRA FEATURES

LN	OB/XF CODE	DESCRIPTION	BLD	CAP	L	W	UNITS	UT	Adj R	ADJ UNIT PRICE	ORIG COND	YEAR ON	YEAR ACTUAL	Q	% COND	OB/XF MKT VALUE	NOTES
1	0811	CONCRETE B	0	100	0	0	664.00	SF	5.20	5.20	100	2022	2022	3	100	3,453	
2	0810	CONCRETE A	0	100	0	0	24.00	SF	6.50	6.50	100	2022	2022	3	100	156	

LAND DESCRIPTION

TOTAL OB/XF 3,609

LN	USE CODE	CLS	LAND USE DESCRIPTION	CAP	RD	LOC ZONE	FRONT	DEPTH	TOT LND UTS	UNIT TYPE	DT	DPTH FACT	% COND	TOT ADJ	UNIT PRICE	ADJ UNIT PRICE	LAND VALUE	OTHER ADJUSTMENTS AND NOTES	YEAR	DENSITY	DECL	FRZ	YR	CONSRV
1	000135	C	SFR CNSVTN	100		PUD	0.00	0.00	1.00	LT		1.00	1.00	1.00	75,000.00	75,000.00	75,000							

REVIEW DATE 10/17/2022 BY DJ Total Acres: 0.00 Total Land Value: 75,000 Market: 0 Agricultural: 0 Common: 75,000 PRINTED 08/06/2024 BY SYS