LOT 27
VILLAGES OF WOODBRIDGE
PHASE IV B OR 2438/574

ROBERT TYLER
95126 COLNAGO COURT
FERNANDINA BEACH, FL 32034

2024

42-2N-28-1141-0027-0000

BUILDING CHARACTERISTICS

ELEMENT	CD	CONSTRUCTION
Exterior Wall	31	HARDIE BRD 100
Roof Structur	03	GABLE/HIP 100
Roof Cover	03	COMP SHNGL 100
Interior Wall	05	DRYWALL 100
Interior Floo	08	SHT VINYL 100
Air Condition	03	CENTRAL 100
Heating Type	04	AIR DUCTED 100
Bedrooms		3 100
Bathrooms		2 100
Frame	02	WOOD FRAME 100
Stories	1.	1. 100
Units		0 100
Occupancy	00	NONE 100
Quality	05	Quality Level 05

DOR CODE 0100 SINGLE FAMILY
MAP NUM | MKT AREA 04
NEIGHBORHOOD/LOC 4068.100

AREA TYPE	TOTAL GROSS AREA	PCT OF BASE	TOT ADJ AREA	SUBAREA MARKET VALUE
BAS	1,743	100	1,743	193,598
FGR	761	55	419	46,539
FOP	16	30	5	555
FOP	190	30	57	6,331
TOTALS	2,710		2,224	247,024

MARKET ADJUSTMENTS

TYPE	MDL	EFF. AREA	TOT ADJ PTS	EFF. BASE RATE	REPL. COST NEW	AYB	EYB	ECON	FNCT		NORM	% COND
0100	01	2,224	117.5020	111.63	248,265	2021	2021	0	0	0	0.50	99.50

1 SINGLE FAM – 100% - 2022 Heated Area: 1743 HX Base Yr 2022

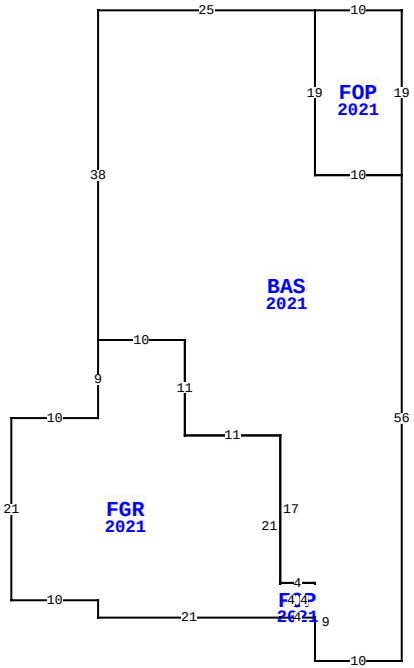

95126 COLNAGO CT, FERNANDINA BEACH

BLD DATE		LGL DATE	
XF DATE		LAND DATE	05/18/2023 MLU
INC DATE		AG DATE	

NASSAU COUNTY PROPERTY

PAGE 1 of 1 4

VALUATION SUMMARY

VALUATION BY		STANDARD
Tax Group: 4	Tax Dist:	
BUILDING MARKET VALUE		247,024
TOTAL MARKET OB/XF VALUE		6,064
TOTAL LAND VALUE - MARKET		75,000
TOTAL MARKET VALUE		328,088
SOH/AGL Deduction		57,527
ASSESSED VALUE		270,561
TOTAL EXEMPTION VALUE	HX HB	50,000
BASE TAXABLE VALUE		220,561
TOTAL JUST VALUE		328,088
NCON VALUE		0
INCOME VALUE		
PREVIOUS YEAR MKT VALUE		295,542

PERMIT NUM	DESCRIPTION	AMT	ISSUED
C2105525	CO ISSUED	0	12/23/2021
B2105525	NEW CONSTR	272,307	04/30/2021

SALES DATA

OFF RECORD Number	DATE	TYPE INST	Q U	V I	RSN CD	SALE PRICE
2526/0554	12/23/2021	SW	Q	I	01	315,300
GRANTOR: RICHMOND AMERICAN HOM						
GRANTEE: ROBERT TYLER						
2445/0019	3/23/2021	SW	Q	V	05	675,700
GRANTOR: WOODBRIDGE NASSAU LLC						
GRANTEE: RICHMOND AMERICAN H						

BUILDING NOTES

BUILDING DIMENSIONS

FOP=[YR=2021] W10 BAS=[YR=2021] W25 S38 FGR=[YR=2021] S9 W10 S21 E10 S2 E21 FOP=[YR=2021] E4 N4 W4 S4$ N21 W11 N11 W10$ E10 S11 E11 S17 E4 S9 E10 N56 W10 N19$ S19 E10 N19$.

EXTRA FEATURES

LN	OB/XF CODE	DESCRIPTION	BLD	CAP	L	W	UNITS	UT	Adj R	ADJ UNIT PRICE	ORIG COND	YEAR ON	YEAR ACTUAL	Q	% COND	OB/XF MKT VALUE	NOTES
1	0811	CONCRETE B	0	100	0	0	1,178.00	SF	5.20	5.20	100	2021	2021	3	99	6,064	

LAND DESCRIPTION

TOTAL OB/XF 6,064

LN	USE CODE	CLS	LAND USE DESCRIPTION	CAP	RD	LOC ZONE	FRONT	DEPTH	TOT LND UTS	UNIT TYPE	DT	DPTH FACT	% COND	TOT ADJ	UNIT PRICE	ADJ UNIT PRICE	LAND VALUE	OTHER ADJUSTMENTS AND NOTES	YEAR	DENSITY	DECL	FRZ	YR	CONSRV
1	000134	C	SFR POND	100		PUD	0.00	0.00	1.00	LT		1.00	1.00	1.00	75,000.00	75,000.00	75,000							

REVIEW DATE 01/04/2022 BY DJ Total Acres: 0.00 Total Land Value: 75,000 Market: 0 Agricultural: 0 Common: 75,000 PRINTED 08/06/2024 BY SYS