LOT 17
VILLAGES OF WOODBRIDGE
PHASE IV B OR 2438/574

STEWART MELISSA A
95125 COLNAGO COURT
FERNANDINA BEACH, FL 32034

2024

42-2N-28-1141-0017-0000

BUILDING CHARACTERISTICS

ELEMENT	CD	CONSTRUCTION
Exterior Wall	31	HARDIE BRD 100
Roof Structur	03	GABLE/HIP 100
Roof Cover	03	COMP SHNGL 100
Interior Wall	05	DRYWALL 100
Interior Floo	13	LVT/LAMNT 100
Air Condition	03	CENTRAL 100
Heating Type	04	AIR DUCTED 100
Bedrooms		3 100
Bathrooms		2 100
Frame	02	WOOD FRAME 100
Stories	1.	1. 100
Units		0 100
Occupancy	00	NONE 100
Quality	05	Quality Level 05

DOR CODE 0100 SINGLE FAMILY
MAP NUM | MKT AREA 04
NEIGHBORHOOD/LOC 4068.100

AREA TYPE	TOTAL GROSS AREA	PCT OF BASE	TOT ADJ AREA	SUBAREA MARKET VALUE
BAS	1,601	100	1,601	183,635
FGR	581	55	320	36,704
FOP	48	30	14	1,606
FOP	160	30	48	5,506
TOTALS	2,390		1,983	227,450

MARKET ADJUSTMENTS

TYPE	MDL	EFF. AREA	TOT ADJ PTS	EFF. BASE RATE	REPL. COST NEW	AYB	EYB	ECON	FNCT		NORM	% COND
0100	01	1,983	120.7360	114.70	227,450	2022	2022	0	0	0	0.00	100.00

1 SINGLE FAM – 100% - 2023 Heated Area: 1601 HX Base Yr 2023

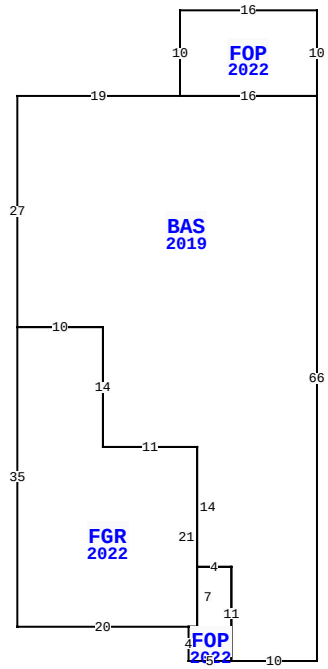

95125 COLNAGO CT, FERNANDINA BEACH

BLD DATE		LGL DATE	
XF DATE		LAND DATE	05/18/2023 MLU
INC DATE		AG DATE	

NASSAU COUNTY PROPERTY

PAGE 1 of 1 4

VALUATION SUMMARY

VALUATION BY		STANDARD
Tax Group: 4	Tax Dist:	
BUILDING MARKET VALUE		227,450
TOTAL MARKET OB/XF VALUE		3,957
TOTAL LAND VALUE - MARKET		75,000
TOTAL MARKET VALUE		306,407
SOH/AGL Deduction		22,752
ASSESSED VALUE		283,655
TOTAL EXEMPTION VALUE	HX HB	50,000
BASE TAXABLE VALUE		233,655
TOTAL JUST VALUE		306,407
NCON VALUE		0
INCOME VALUE		
PREVIOUS YEAR MKT VALUE		275,393

PERMIT NUM	DESCRIPTION	AMT	ISSUED
C2106879	CO ISSUED	0	04/29/2022
B2106879	NEW CONSTR	244,576	05/27/2021

SALES DATA

OFF RECORD Number	DATE	TYPE INST	Q U	V I	RSN CD	SALE PRICE
2584/0117	8/15/2022	WD	Q	I	01	419,900
GRANTOR: LISTOR STEVEN LLOYD &						
GRANTEE: STEWART MELISSA A						
2566/0158	4/28/2022	SW	Q	I	01	378,500
GRANTOR: RICHMOND AMERICAN HOM						
GRANTEE: LISTOR STEVEN LLOYD						

BUILDING NOTES

BUILDING DIMENSIONS

FOP=[YR=2022] W16 S10 BAS=[YR=2019] W19 S27 FGR=[YR=2022] S35 E20 FOP=[YR=2022] S4 E5 N11 W4 S7 W1$ E1 N21 W11 N14 W10$ E10 S14 E11 S14 E4 S11 E10 N66 W16$ E16 N10$.

EXTRA FEATURES

LN	OB/XF CODE	DESCRIPTION	BLD	CAP	L	W	UNITS	UT	Adj R	ADJ UNIT PRICE	ORIG COND	YEAR ON	YEAR ACTUAL	Q	% COND	OB/XF MKT VALUE	NOTES
1	0811	CONCRETE B	0	100	0	0	761.00	SF	5.20	5.20	100	2022	2022	3	100	3,957	

LAND DESCRIPTION

TOTAL OB/XF 3,957

LN	USE CODE	CLS	LAND USE DESCRIPTION	CAP	RD	LOC ZONE	FRONT	DEPTH	TOT LND UTS	UNIT TYPE	DT	DPTH FACT	% COND	TOT ADJ	UNIT PRICE	ADJ UNIT PRICE	LAND VALUE	OTHER ADJUSTMENTS AND NOTES	YEAR	DENSITY	DECL	FRZ	YR	CONSRV
1	000134	C	SFR POND	100		PUD	0.00	0.00	1.00	LT		1.00	1.00	1.00	75,000.00	75,000.00	75,000							

REVIEW DATE 08/08/2022 BY KWWW Total Acres: 0.00 Total Land Value: 75,000 Market: 0 Agricultural: 0 Common: 75,000 PRINTED 08/06/2024 BY SYS