BLOCK 2 LOT 50
IN OR 539 PG 261
R788161 & R788162 & R788163

PARSLEY JOYCE F
85209 KIRKLAND ROAD
YULEE, FL 32097

2024

42-2N-27-4612-0002-0500

NASSAU COUNTY PROPERTY

BUILDING CHARACTERISTICS

ELEMENT	CD	CONSTRUCTION
Exterior Wall	05	AVERAGE 100
Roof Structur	03	GABLE/HIP 100
Roof Cover	03	COMP SHNGL 100
Interior Wall	05	DRYWALL 100
Interior Floo	14	CARPET 80
Interior Floo	08	SHT VINYL 20
Air Condition	03	CENTRAL 100
Heating Type	04	AIR DUCTED 100
Bedrooms		3 100
Bathrooms		2 100
Frame	02	WOOD FRAME 100
Stories	1.	1. 100
Units		0 100
Quality	03	Quality Level 03
DOR CODE	0200	MOBILE HOME
MAP NUM		MKT AREA 04
NEIGHBORHOOD/LOC	4048.00	

AREA TYPE	TOTAL GROSS AREA	PCT OF BASE	TOT ADJ AREA	SUBAREA MARKET VALUE
BAS	1,875	100	1,875	72,518
FOP	250	30	75	2,901
FST	168	65	109	4,216
STP	36	10	4	155
UGR	1,080	45	486	18,796
TOTALS	3,409		2,549	98,585

MARKET ADJUSTMENTS

TYPE	MDL	EFF. AREA	TOT ADJ PTS	EFF. BASE RATE	REPL. COST NEW	AYB	EYB	ECON	FNCT		NORM	% COND
0800	02	2,549	117.2000	87.90	224,057	1999	1999	0	0	0	56.00	44.00

1 M/H 94+ – 100% - 0 Heated Area: 1875 HX Base Yr

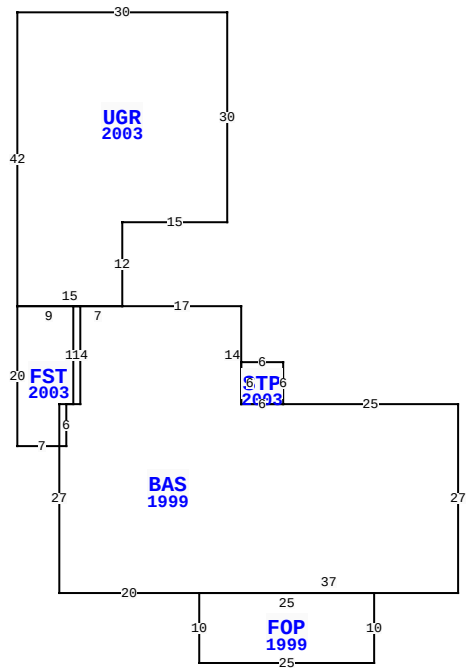

85209 KIRKLAND RD, YULEE

BLD DATE		LGL DATE	
XF DATE		LAND DATE	
INC DATE		AG DATE	

VALUATION SUMMARY

VALUATION BY		STANDARD
Tax Group: 4	Tax Dist:	
BUILDING MARKET VALUE		98,585
TOTAL MARKET OB/XF VALUE		2,835
TOTAL LAND VALUE - MARKET		80,000
TOTAL MARKET VALUE		181,420
SOH/AGL Deduction		91,340
ASSESSED VALUE		90,080
TOTAL EXEMPTION VALUE	HX HB	50,000
BASE TAXABLE VALUE		40,080
TOTAL JUST VALUE		181,420
NCON VALUE		0
INCOME VALUE		
PREVIOUS YEAR MKT VALUE		179,100

PERMIT NUM	DESCRIPTION	AMT	ISSUED
B0311800	XFOB	11,517	10/01/2003
MH982215	MH MOVE-ON	0	03/01/1998
7618	MH MOVE-ON	9,000	01/03/1989

SALES DATA

OFF RECORD Number	DATE	TYPE INST	Q U /	V I /	RSN CD	SALE PRICE
0539/0261	3/22/1988	WD	Q	V		20,000

GRANTOR: SHEFFIELD & LEE
GRANTEE: PARSLEY JOYCE F

BUILDING NOTES

BUILDING DIMENSIONS

BAS=[YR=1999] W25 STP=[YR=2003] N6 W6 S6 E6$ W6 N14 W17 UGR=[YR=2003] N12 E15 N30 W30 S42 FST=[YR=2003] S20 E7 N6 E2 N14 W9$ E15$ W7 S14 W2 S27 E20 FOP=[YR=1999] S10 E25 N10 W25$ E37 N27$.

EXTRA FEATURES

LN	OB/XF CODE	DESCRIPTION	BLD	CAP	L	W	UNITS	UT	Adj R	ADJ UNIT PRICE	ORIG COND	YEAR ON	YEAR ACTUAL	Q	% COND	OB/XF MKT VALUE	NOTES
1	0500	FP-PRE FAB	0	100	0	0	1.00	UT	3,500.00	3,500.00	100	1998	1998	3	81	2,835	

LAND DESCRIPTION

TOTAL OB/XF 2,835

LN	USE CODE	CLS	LAND USE DESCRIPTION	CAP	RD	LOC ZONE	FRONT	DEPTH	TOT LND UTS	UNIT TYPE	DT	DPTH FACT	% COND	TOT ADJ	UNIT PRICE	ADJ UNIT PRICE	LAND VALUE	OTHER ADJUSTMENTS AND NOTES	YEAR	DENSITY	DECL	FRZ	YR	CONSRV
1	000102	C	SFR/MH	100		OR	0.00	0.00	1.00	LT		1.00	1.00	1.00	80,000.00	80,000.00	80,000							

REVIEW DATE 05/12/2019 BY KBA Total Acres: 0.00 Total Land Value: 80,000 Market: 0 Agricultural: 0 Common: 80,000 PRINTED 08/06/2024 BY SYS