LOT 43
HIDEAWAY PHASE 1C OR 2378/1584

MARTIN DAWN & MICHAEL
514 JEREMIAH DRIVE
TRUSSVILLE, AL 35173

2024

42-2N-27-4374-0043-0000

NASSAU COUNTY PROPERTY

BUILDING CHARACTERISTICS

ELEMENT	CD	CONSTRUCTION
Exterior Wall	31	HARDIE BRD 100
Roof Structur	03	GABLE/HIP 100
Roof Cover	03	COMP SHNGL 100
Interior Wall	05	DRYWALL 100
Interior Floo	13	LVT/LAMNT 50
Interior Floo	14	CARPET 50
Air Condition	03	CENTRAL 100
Heating Type	04	AIR DUCTED 100
Bedrooms		4 100
Bathrooms		2 100
Frame	02	WOOD FRAME 100
Stories	2.	2. 100
Units		1 100
Quality	06	Quality Level 06

DOR CODE 0100 SINGLE FAMILY
MAP NUM | MKT AREA 04
NEIGHBORHOOD/LOC 4071.00

AREA TYPE	TOTAL GROSS AREA	PCT OF BASE	TOT ADJ AREA	SUBAREA MARKET VALUE
BAS	358	100	358	41,396
BAS	1,649	100	1,649	190,674
FGR	432	55	238	27,520
FOP	45	30	14	1,619
FOP	130	30	39	4,510
FST	15	55	8	925
STR	44	10	4	463
TOTALS	2,673		2,310	267,105

MARKET ADJUSTMENTS

TYPE	MDL	EFF. AREA	TOT ADJ PTS	EFF. BASE RATE	REPL. COST NEW	AYB	EYB	ECON	FNCT		NORM	% COND
0100	01	2,310	121.7160	115.63	267,105	2023	2023	0	0	0	0.00	100.00

1 SINGLE FAM – 0% - 2024 Heated Area: 2007 HX Base Yr

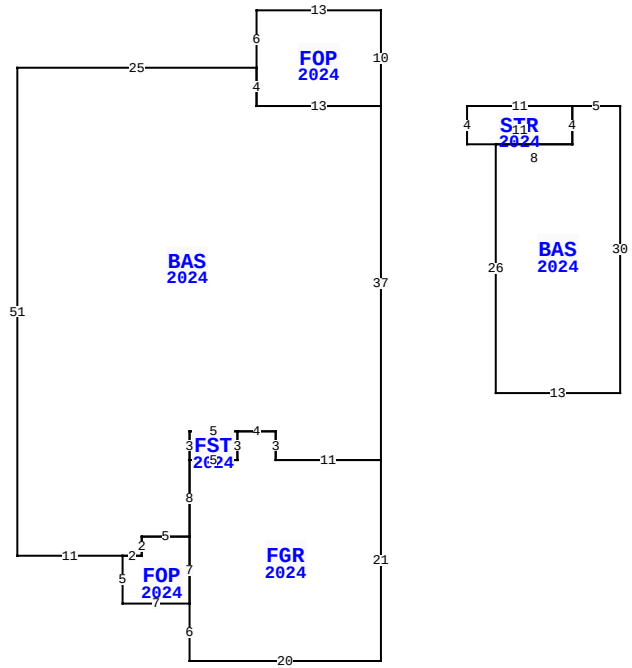

86453 MELODY LN, YULEE

BLD DATE		LGL DATE	
XF DATE		LAND DATE	
INC DATE		AG DATE	

NASSAU COUNTY PROPERTY — VALUATION SUMMARY

VALUATION BY	STANDARD
Tax Group: 4	Tax Dist:
BUILDING MARKET VALUE	267,105
TOTAL MARKET OB/XF VALUE	3,848
TOTAL LAND VALUE - MARKET	50,000
TOTAL MARKET VALUE	320,953
SOH/AGL Deduction	0
ASSESSED VALUE	320,953
TOTAL EXEMPTION VALUE	0
BASE TAXABLE VALUE	320,953
TOTAL JUST VALUE	320,953
NCON VALUE	270,953
INCOME VALUE	
PREVIOUS YEAR MKT VALUE	50,000

PERMIT NUM	DESCRIPTION	AMT	ISSUED
230003535	CO		03/16/2023
22014682	NEW CONSTR	325,668	09/27/2022

SALES DATA

OFF RECORD Number	DATE	TYPE INST	Q / U	V / I	RSN CD	SALE PRICE
2676/1803	10/27/2023	WD	Q	I	01	400,000
GRANTOR: SEDA CONSTRUCTION COM						
GRANTEE: MARTIN DAWN & MICHA						
2618/1206	2/03/2023	WD	U	V	30	75,000
GRANTOR: SEMANIK EQUITY DEVELO						
GRANTEE: SEDA CONSTRUCTION C						

BUILDING NOTES

EXTRA FEATURES

LN	OB/XF CODE	DESCRIPTION	BLD	CAP	L	W	UNITS	UT	Adj R	ADJ UNIT PRICE	ORIG COND	YEAR ON	YEAR ACTUAL	Q	% COND	OB/XF MKT VALUE	NOTES
1	0810	CONCRETE A	0	0	0	0	592.00	SF	6.50	6.50	100	2024	2023		100	3,848	

BUILDING DIMENSIONS

BAS=[YR=2024;ORIG=10,10] E25 S4 E13 S37 W11 N3 W4 W5 S3 S8 W5 S2 W2 W11 N51 $
FGR=[YR=2024;ORIG=48,51] W11 N3 W4 S3 W5 S8 S7 S6 E20 N21 $
FOP=[YR=2024;ORIG=48,14] W13 N4 N6 E13 S10 $
FOP=[YR=2024;ORIG=28,59] W5 S2 W2 S5 E7 N7 $
FST=[YR=2024;ORIG=28,48] E5 S3 W5 N3 $
BAS=[YR=2024;ORIG=68,18] N4 E5 S30 W13 N26 E8 $
STR=[YR=2024;ORIG=68,14] W11 S4 E11 N4 $
.

LAND DESCRIPTION

TOTAL OB/XF 3,848

LN	USE CODE	CLS	LAND USE DESCRIPTION	CAP	RD	LOC ZONE	FRONT	DEPTH	TOT LND UTS	UNIT TYPE	DT	DPTH FACT	% COND	TOT ADJ	UNIT PRICE	ADJ UNIT PRICE	LAND VALUE	OTHER ADJUSTMENTS AND NOTES	YEAR	DENSITY	DECL	FRZ	YR	CONSRV
1	000100	C	SFR	0		PUD	0.00	0.00	1.00	LT		1.00	1.00	1.00	50,000.00	50,000.00	50,000							

REVIEW DATE 07/05/2023 BY NW Total Acres: 0.00 Total Land Value: 50,000 Market: 0 Agricultural: 0 Common: 50,000 PRINTED 08/06/2024 BY SYS