LOT 3
HIDEAWAY PHASE 1C OR 2378/1584

HODZIC MIRSAD & IRENA
86781 LAZY LAKE CIRCLE
YULEE, FL 32097

2024

42-2N-27-4374-0003-0000

NASSAU COUNTY PROPERTY

BUILDING CHARACTERISTICS

ELEMENT	CD	CONSTRUCTION
Exterior Wall	30	VINYL 100
Roof Structur	03	GABLE/HIP 100
Roof Cover	03	COMP SHNGL 100
Interior Wall	05	DRYWALL 100
Interior Floo	13	LVT/LAMNT 50
Interior Floo	14	CARPET 50
Air Condition	03	CENTRAL 100
Heating Type	04	AIR DUCTED 100
Bedrooms		4 100
Bathrooms		2.5 100
Frame	02	WOOD FRAME 100
Stories	1.	1. 100
Units		1 100
Quality	06	Quality Level 06

DOR CODE 0100 SINGLE FAMILY
MAP NUM | MKT AREA 04
NEIGHBORHOOD/LOC 4071.00

AREA TYPE	TOTAL GROSS AREA	PCT OF BASE	TOT ADJ AREA	SUBAREA MARKET VALUE
BAS	1,650	100	1,650	174,141
FGR	460	55	253	26,702
FOP	55	30	16	1,689
FOP	140	30	42	4,433
FUS	1,125	100	1,125	118,733
STR	39	10	4	422
TOTALS	3,469		3,090	326,119

MARKET ADJUSTMENTS

TYPE	MDL	EFF. AREA	TOT ADJ PTS	EFF. BASE RATE	REPL. COST NEW	AYB	EYB	ECON	FNCT		NORM	% COND
0100	01	3,090	111.0900	105.54	326,119	2023	2023	0	0	0	0.00	100.00

1 SINGLE FAM – 0% - 2024 Heated Area: 2775 HX Base Yr

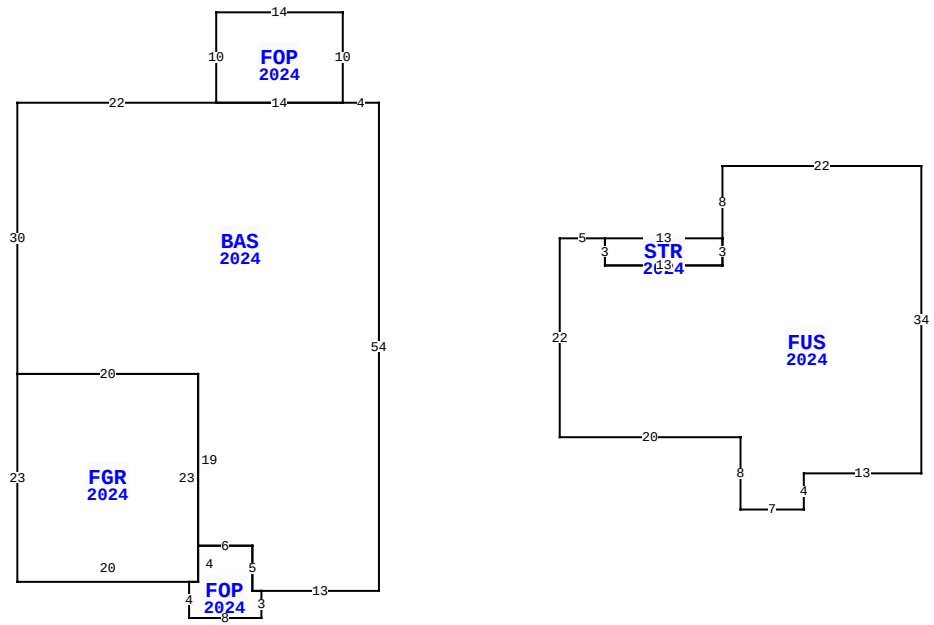

86781 LAZY LAKE CIR, YULEE

BLD DATE		LGL DATE	
XF DATE		LAND DATE	
INC DATE		AG DATE	

VALUATION SUMMARY

VALUATION BY	STANDARD
Tax Group: 4	Tax Dist:
BUILDING MARKET VALUE	326,119
TOTAL MARKET OB/XF VALUE	3,848
TOTAL LAND VALUE - MARKET	50,000
TOTAL MARKET VALUE	379,967
SOH/AGL Deduction	0
ASSESSED VALUE	379,967
TOTAL EXEMPTION VALUE	0
BASE TAXABLE VALUE	379,967
TOTAL JUST VALUE	379,967
NCON VALUE	329,967
INCOME VALUE	
PREVIOUS YEAR MKT VALUE	50,000

PERMIT NUM	DESCRIPTION	AMT	ISSUED
230013753	CO ISSUED		10/26/2023
230008337	HTD2806 G444 P190	505,472	06/28/2023

SALES DATA

OFF RECORD Number	DATE	TYPE INST	Q / U	V / I	RSN CD	SALE PRICE
2694/250	2/09/2024	WD	Q	I	02	476,900
GRANTOR: SEDA CONSTRUCTION COM						
GRANTEE: HODZIC MIRSAD & IRE						
2649/681	6/21/2023	WD	U	V	30	150,000
GRANTOR: SEMANIK EQUITY DEVELO						
GRANTEE: SEDA CONSTRUCTION C						

BUILDING NOTES

EXTRA FEATURES

LN	OB/XF CODE	DESCRIPTION	BLD	CAP	L	W	UNITS	UT	Adj R	ADJ UNIT PRICE	ORIG COND	YEAR ON	YEAR ACTUAL	Q	% COND	OB/XF MKT VALUE	NOTES
1	0810	CONCRETE A	0	0	0	0	592.00	SF	6.50	6.50	100	2024	2023		100	3,848	

BUILDING DIMENSIONS

BAS=[YR=2024;ORIG=10,10] E22 E14 E4 S54 W13 W1 N5 W6 N19 W20 N30 $
FGR=[YR=2024;ORIG=10,40] E20 S23 W20 N23 $
FOP=[YR=2024;ORIG=30,59] E6 S5 E1 S3 W8 N4 E1 N4 $
FOP=[YR=2024;ORIG=46,10] W14 N10 E14 S10 $
FUS=[YR=2024;ORIG=70,25] E5 S3 E13 N3 N8 E22 S34 W13 S4 W7 N8 W20 N22 $
STR=[YR=2024;ORIG=75,25] E13 S3 W13 N3 $
.

LAND DESCRIPTION

TOTAL OB/XF 3,848

LN	USE CODE	CLS	LAND USE DESCRIPTION	CAP	RD	LOC ZONE	FRONT	DEPTH	TOT LND UTS	UNIT TYPE	DT	DPTH FACT	% COND	TOT ADJ	UNIT PRICE	ADJ UNIT PRICE	LAND VALUE	OTHER ADJUSTMENTS AND NOTES	YEAR	DENSITY	DECL	FRZ	YR	CONSRV
1	000100	C	SFR	0		PUD	0.00	0.00	1.00	LT		1.00	1.00	1.00	50,000.00	50,000.00	50,000							

REVIEW DATE 12/04/2023 BY NW Total Acres: 0.00 Total Land Value: 50,000 Market: 0 Agricultural: 0 Common: 50,000 PRINTED 08/06/2024 BY SYS