LOT 35
HIDEAWAY PHASE 1A PBK 8/134

OERGEL MICHAEL K & MARY B
86345 MOONLIT WALK CIRCLE
YULEE, FL 32097

2024

42-2N-27-4372-0035-0000

NASSAU COUNTY PROPERTY

BUILDING CHARACTERISTICS

ELEMENT	CD	CONSTRUCTION
Exterior Wall	30	VINYL 70
Exterior Wall	16	WD FR STUC 30
Roof Structur	03	GABLE/HIP 100
Roof Cover	03	COMP SHNGL 100
Interior Wall	05	DRYWALL 100
Interior Floo	11	CLAY TILE 50
Interior Floo	14	CARPET 50
Air Condition	03	CENTRAL 100
Heating Type	04	AIR DUCTED 100
Bedrooms		4 100
Bathrooms		2.5 100
Frame	02	WOOD FRAME 100
Stories	2.	2. 100
Units		0 100
Occupancy	00	NONE 100
Quality	06	Quality Level 06
DOR CODE	0100	SINGLE FAMILY
MAP NUM		MKT AREA 04
NEIGHBORHOOD/LOC	4071.00	

AREA TYPE	TOTAL GROSS AREA	PCT OF BASE	TOT ADJ AREA	SUBAREA MARKET VALUE
BAS	1,718	100	1,718	185,577
FGR	690	55	380	41,048
FOP	36	30	11	1,189
FOP	128	30	38	4,104
FUS	1,208	100	1,208	130,488
PTO	32	5	2	216
PTO	280	5	14	1,512
TOTALS	4,092		3,371	364,134

MARKET ADJUSTMENTS

TYPE	MDL	EFF. AREA	TOT ADJ PTS	EFF. BASE RATE	REPL. COST NEW	AYB	EYB	ECON	FNCT		NORM	% COND
0100	01	3,371	116.8032	110.96	374,046	2017	2017	0	0	0	2.65	97.35

1 SINGLE FAM – 0% - 2023 Heated Area: 2926 HX Base Yr

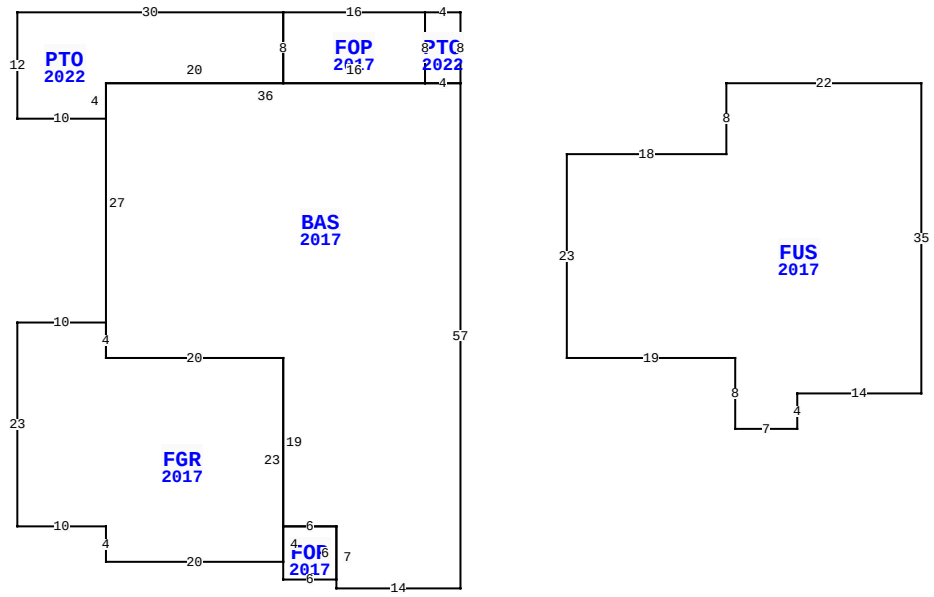

86345 MOONLIT WALK CIR, YULEE

BLD DATE	05/17/2022 NW	LGL DATE	
XF DATE		LAND DATE	
INC DATE		AG DATE	

VALUATION SUMMARY

VALUATION BY	STANDARD
Tax Group: 4	Tax Dist:
BUILDING MARKET VALUE	364,134
TOTAL MARKET OB/XF VALUE	4,474
TOTAL LAND VALUE - MARKET	50,000
TOTAL MARKET VALUE	418,608
SOH/AGL Deduction	0
ASSESSED VALUE	418,608
TOTAL EXEMPTION VALUE	0
BASE TAXABLE VALUE	418,608
TOTAL JUST VALUE	418,608
NCON VALUE	0
INCOME VALUE	
PREVIOUS YEAR MKT VALUE	387,064

PERMIT NUM	DESCRIPTION	AMT	ISSUED
17007538	CO ISSUED	0	08/21/2017
17001578	NEW CONSTR	356,806	03/01/2017

SALES DATA

OFF RECORD Number	DATE	TYPE INST	Q U	V I	RSN CD	SALE PRICE
2578/0860	7/18/2022	WD	Q	I	01	498,000
GRANTOR: HALL EMILY MARIE & JE						
GRANTEE: OERGEL MICHAEL K &						
2145/0157	8/25/2017	WD	Q	I	01	275,000
GRANTOR: SEDA CONSTRUCTION COM						
GRANTEE: HALL EMILY MARIE &						

BUILDING NOTES

BUILDING DIMENSIONS

PTO=[YR=2022] N8 W4 S8 E4$ BAS=[YR=2017] W4 FOP=[YR=2017] N8 W16 PTO=[YR=2022] W30 S12 E10 N4 E20 N8$ S8E16$ W36 S27 FGR=[YR=2017] W10 S23 E10 S4 E20 FOP=[YR=2017] S2 E6 N6 W6 S4$ N23 W20 N4$ S4 E20 S19 E6 S7 E14 N57$ PTR=[YR=2017] E30 FUS=[YR=2017] E22S35 W14 S4 W7 N8 W19 N23 E18 N8$ W30$.

EXTRA FEATURES

LN	OB/XF CODE	DESCRIPTION	BLD	CAP	L	W	UNITS	UT	Adj R	ADJ UNIT PRICE	ORIG COND	YEAR ON	YEAR ACTUAL	Q	% COND	OB/XF MKT VALUE	NOTES
1	0811	CONCRETE B	0	0	0	0	887.00	SF	5.20	5.20	100	2017	2017	3	97	4,474	

LAND DESCRIPTION

TOTAL OB/XF 4,474

LN	USE CODE	CLS	LAND USE DESCRIPTION	CAP	RD	LOC ZONE	FRONT	DEPTH	TOT LND UTS	UNIT TYPE	DT	DPTH FACT	% COND	TOT ADJ	UNIT PRICE	ADJ UNIT PRICE	LAND VALUE	OTHER ADJUSTMENTS AND NOTES	YEAR	DENSITY	DECL	FRZ	YR	CONSRV
1	000100	C	SFR	0		PUD	0.00	0.00	1.00	LT		1.00	1.00	1.00	50,000.00	50,000.00	50,000							

REVIEW DATE 12/09/2022 BY NWA Total Acres: 0.00 Total Land Value: 50,000 Market: 0 Agricultural: 0 Common: 50,000 PRINTED 08/06/2024 BY SYS