LOT 226
HICKORY VILLAGE #4 PB 7/122

CARAHER ANTHONY & MELINDA
86311 SAND HICKORY TRL
YULEE, FL 32097

2024

42-2N-27-435H-0226-0000

NASSAU COUNTY PROPERTY

BUILDING CHARACTERISTICS

ELEMENT	CD	CONSTRUCTION
Exterior Wall	16	WD FR STUC 100
Roof Structur	03	GABLE/HIP 100
Roof Cover	03	COMP SHNGL 100
Interior Wall	05	DRYWALL 100
Interior Floo	14	CARPET 80
Interior Floo	11	CLAY TILE 20
Air Condition	03	CENTRAL 100
Heating Type	04	AIR DUCTED 100
Bedrooms		4 100
Bathrooms		2 100
Frame	02	WOOD FRAME 100
Stories	1.	1. 100
Units		0 100
Occupancy	00	NONE 100
Quality	06	Quality Level 06
DOR CODE	0100	SINGLE FAMILY
MAP NUM		MKT AREA 04
NEIGHBORHOOD/LOC	4047.00	

AREA TYPE	TOTAL GROSS AREA	PCT OF BASE	TOT ADJ AREA	SUBAREA MARKET VALUE
BAS	2,005	100	2,005	215,269
FGR	495	55	272	29,203
FOP	34	30	10	1,073
FOP	154	30	46	4,939
USP	208	30	62	6,657
TOTALS	2,896		2,395	257,142

MARKET ADJUSTMENTS

TYPE	MDL	EFF. AREA	TOT ADJ PTS	EFF. BASE RATE	REPL. COST NEW	AYB	EYB	ECON	FNCT		NORM	% COND
0100	01	2,395	123.5192	117.34	281,029	2006	2006	0	0	0	8.50	91.50

1 SINGLE FAM – 100% - 2020 Heated Area: 2005 HX Base Yr 2020

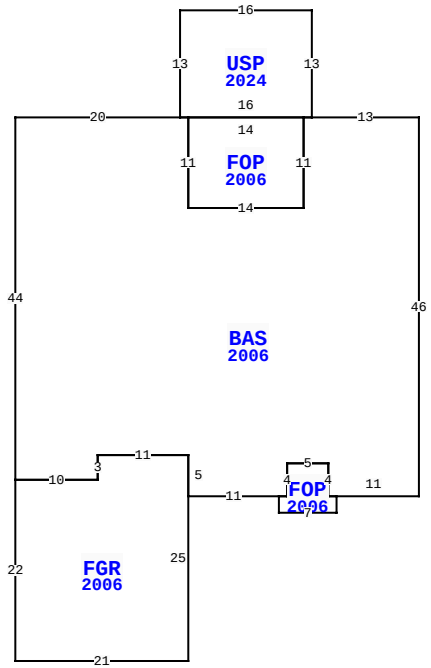

86311 SAND HICKORY TRL, YULEE

BLD DATE		LGL DATE	
XF DATE		LAND DATE	
INC DATE		AG DATE	

NASSAU COUNTY PROPERTY — VALUATION SUMMARY

VALUATION BY		STANDARD
Tax Group: 4	Tax Dist:	
BUILDING MARKET VALUE		257,142
TOTAL MARKET OB/XF VALUE		5,587
TOTAL LAND VALUE - MARKET		55,000
TOTAL MARKET VALUE		317,729
SOH/AGL Deduction		93,481
ASSESSED VALUE		224,248
TOTAL EXEMPTION VALUE	HX HB	50,000
BASE TAXABLE VALUE		174,248
TOTAL JUST VALUE		317,729
NCON VALUE		11,371
INCOME VALUE		
PREVIOUS YEAR MKT VALUE		299,926

PERMIT NUM	DESCRIPTION	AMT	ISSUED
230010763	SCRN ROOM	6,913	08/21/2023
M11502	MECH OTHER	0	05/01/2006
C17511	CO ISSUED	150,447	04/01/2006
B17511	NEW CONSTR	150,447	04/01/2006
E17132	ELEC OTHER	2,000	04/01/2006
P10989	OTHER	0	04/01/2006

SALES DATA

OFF RECORD Number	DATE	TYPE INST	Q / U	V / I	RSN CD	SALE PRICE
2724/772	7/09/2024	WD	Q	I	01	385,000
GRANTOR: BONACCHI THOMAS J & C						
GRANTEE: CARAHER ANTHONY & M						
2323/1196	12/05/2019	WD	Q	I	02	235,000
GRANTOR: ADLER AUSTIN B & KRIS						
GRANTEE: BONACCHI THOMAS J &						

BUILDING NOTES

EXTRA FEATURES

LN	OB/XF CODE	DESCRIPTION	BLD	CAP	L	W	UNITS	UT	Adj R	ADJ UNIT PRICE	ORIG COND	YEAR ON	YEAR ACTUAL	Q	% COND	OB/XF MKT VALUE	NOTES
1	0504	FP-ELECTRI	0	100	0	0	1.00	UT	2,000.00	2,000.00	100	2006	2006	3	90	1,800	
2	0811	CONCRETE B	0	100	0	0	837.00	SF	5.20	5.20	100	2006	2006	3	87	3,787	

BUILDING DIMENSIONS

BAS=[YR=2006;ORIG=0,0] W13 W1 S11 W14 N11 W1 W20 S44 E10 N3 E11 S5 E11 E1 N4 E5 S4 E11 N46 $
FGR=[YR=2006;ORIG=-49,44] S22 E21 N25 W11 S3 W10 $
FOP=[YR=2006;ORIG=-14,0] W14 S11 E14 N11 $
FOP=[YR=2006;ORIG=-17,46] S2 E7 N2 W1 N4 W5 S4 W1 $
USP=[YR=2024;ORIG=-29,-13] E16 S13 W16 N13 $
.

LAND DESCRIPTION

TOTAL OB/XF 5,587

LN	USE CODE	CLS	LAND USE DESCRIPTION	CAP	RD	LOC ZONE	FRONT	DEPTH	TOT LND UTS	UNIT TYPE	DT	DPTH FACT	% COND	TOT ADJ	UNIT PRICE	ADJ UNIT PRICE	LAND VALUE	OTHER ADJUSTMENTS AND NOTES	YEAR	DENSITY	DECL	FRZ	YR	CONSRV
1	000100	C	SFR	100		RSF-2	0.00	0.00	1.00	LT		1.00	1.00	1.00	55,000.00	55,000.00	55,000							

REVIEW DATE 02/16/2024 BY WW Total Acres: 0.00 Total Land Value: 55,000 Market: 0 Agricultural: 0 Common: 55,000 PRINTED 08/06/2024 BY SYS