LOT 177
IN OR 1347/994
HICKORY VILLAGE #3 PB 6/372

FELIX DEBORAH
86111 KNOTTED OAK WAY
YULEE, FL 32097

2024

42-2N-27-435H-0177-0000

NASSAU COUNTY PROPERTY

BUILDING CHARACTERISTICS

ELEMENT	CD	CONSTRUCTION
Exterior Wall	10	ABOVE AVG 70
Exterior Wall	16	WD FR STUC 30
Roof Structur	03	GABLE/HIP 100
Roof Cover	03	COMP SHNGL 100
Interior Wall	05	DRYWALL 100
Interior Floo	14	CARPET 80
Interior Floo	08	SHT VINYL 20
Air Condition	03	CENTRAL 100
Heating Type	04	AIR DUCTED 100
Bedrooms		4 100
Bathrooms		3 100
Frame	02	WOOD FRAME 100
Stories	1.	1. 100
Units		0 100
Occupancy	00	NONE 100
Quality	06	Quality Level 06
DOR CODE	0100	SINGLE FAMILY
MAP NUM		MKT AREA 04
NEIGHBORHOOD/LOC	4047.00	

AREA TYPE	TOTAL GROSS AREA	PCT OF BASE	TOT ADJ AREA	SUBAREA MARKET VALUE
BAS	247	100	247	24,720
BAS	2,187	100	2,187	218,882
FGR	428	55	235	23,520
FGR	476	55	262	26,222
FOP	36	30	11	1,101
FOP	36	30	11	1,101
FOP	70	30	21	2,102
FOP	413	30	124	12,410
TOTALS	3,893		3,098	310,057

MARKET ADJUSTMENTS

TYPE	MDL	EFF. AREA	TOT ADJ PTS	EFF. BASE RATE	REPL. COST NEW	AYB	EYB	ECON	FNCT		NORM	% COND
0100	01	3,098	115.3220	109.56	339,417	2005	2005	0	0	0	8.65	91.35

1 SINGLE FAM – 100% - 2007 Heated Area: 2434 HX Base Yr 2007

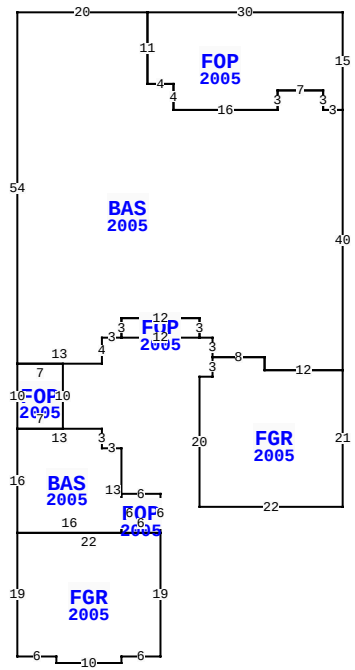

86111 KNOTTED OAK WAY, YULEE

BLD DATE	03/14/2023 NW	LGL DATE	
XF DATE		LAND DATE	
INC DATE		AG DATE	

VALUATION SUMMARY

VALUATION BY		STANDARD
Tax Group: 4	Tax Dist:	
BUILDING MARKET VALUE		310,057
TOTAL MARKET OB/XF VALUE		8,101
TOTAL LAND VALUE - MARKET		55,000
TOTAL MARKET VALUE		373,158
SOH/AGL Deduction		174,414
ASSESSED VALUE		198,744
TOTAL EXEMPTION VALUE	HX HB SX	100,000
BASE TAXABLE VALUE		98,744
TOTAL JUST VALUE		373,158
NCON VALUE		0
INCOME VALUE		
PREVIOUS YEAR MKT VALUE		359,492

PERMIT NUM	DESCRIPTION	AMT	ISSUED
M0509214	MECH OTHER	0	02/01/2005
E0414099	ELEC OTHER	2,000	12/01/2004
B0413624	NEW CONSTR	200,730	09/01/2004

SALES DATA

OFF RECORD Number	DATE	TYPE INST	Q U	V I	RSN CD	SALE PRICE
1347/0994	9/06/2005	WD	Q	I		261,100
GRANTOR: COPPENBARGER HOMES						
GRANTEE: FELIX DEBORAH						
1229/1724	5/12/2004	WD	U	V	19	132,000
GRANTOR: MARSH CREEK DEVELOPME						
GRANTEE: COPPENBARGER HOMES						

BUILDING NOTES

BUILDING DIMENSIONS

FOP=[YR=2005] W30 BAS=[YR=2005] W20 S54 FOP=[YR=2005] S10 BAS=[YR=2005] S16 FGR=[YR=2005] S19 E6 S1 E10 N1 E6 N19 FOP=[YR=2005] N6 W6 S6 E6 $ W22 $ E16 N13 W3 N3 W13 $ E7 N10 W7 $ E13 N4 E3 FOP=[YR=2005] E12 N3 W12 S3 $ N3 E12 S3 E2 S3 FGR=[YR=2005] S3 W2 S20 E22 N21 W12 N2 W8 $ E8 S2 E12 N40 W3 N3 W7 S3 W16 N4 W4 N11 $ S11 E4 S4 E16 N3 E7 S3 E3 N15 $.

EXTRA FEATURES

LN	OB/XF CODE	DESCRIPTION	BLD	CAP	L	W	UNITS	UT	Adj R	ADJ UNIT PRICE	ORIG COND	YEAR ON	YEAR ACTUAL	Q	% COND	OB/XF MKT VALUE	NOTES
1	0812	CONCRETE C	0	100	0	0	1,236.00	SF	4.00	4.00	100	2005	2005	3	86	4,252	
2	0855	CONC PAVER	0	100	0	0	440.00	SF	7.00	7.00	100	2005	2005	3	86	2,649	
3	0600	SUMMER KIT	0	100	0	0	1.00	UT	5,000.00	5,000.00	100	2005	2005	3	24	1,200	

LAND DESCRIPTION

TOTAL OB/XF 8,101

LN	USE CODE	CLS	LAND USE DESCRIPTION	CAP	RD	LOC ZONE	FRONT	DEPTH	TOT LND UTS	UNIT TYPE	DT	DPTH FACT	% COND	TOT ADJ	UNIT PRICE	ADJ UNIT PRICE	LAND VALUE	OTHER ADJUSTMENTS AND NOTES	YEAR	DENSITY	DECL	FRZ	YR	CONSRV
1	000100	C	SFR	100		RSF-2	0.00	0.00	1.00	LT		1.00	1.00	1.00	55,000.00	55,000.00	55,000							

REVIEW DATE 05/12/2019 BY KBA Total Acres: 0.00 Total Land Value: 55,000 Market: 0 Agricultural: 0 Common: 55,000 PRINTED 08/06/2024 BY SYS