LOT 170
IN OR 1404/1377
HICKORY VILLAGE #2 PB 7/120

ROBBINS BRUCE LEE & SONYA JOY
86010 EVERGREEN PLACE
YULEE, FL 32097

2024

42-2N-27-435H-0170-0000

BUILDING CHARACTERISTICS

ELEMENT	CD	CONSTRUCTION
Exterior Wall	31	HARDIE BRD 70
Exterior Wall	16	WD FR STUC 30
Roof Structur	03	GABLE/HIP 100
Roof Cover	03	COMP SHNGL 100
Interior Wall	05	DRYWALL 100
Interior Floo	14	CARPET 70
Interior Floo	12	HARDWOOD 30
Air Condition	03	CENTRAL 100
Heating Type	04	AIR DUCTED 100
Bedrooms		5 100
Bathrooms		3 100
Frame	02	WOOD FRAME 100
Stories	1.5	1.5 100
Units		0 100
Occupancy	00	NONE 100
Quality	06	Quality Level 06
DOR CODE	0100	SINGLE FAMILY
MAP NUM		MKT AREA 04
NEIGHBORHOOD/LOC	4047.00	

AREA TYPE	TOTAL GROSS AREA	PCT OF BASE	TOT ADJ AREA	SUBAREA MARKET VALUE
BAS	1,951	100	1,951	211,437
FGR	551	55	303	32,837
FOP	37	30	11	1,192
FOP	120	30	36	3,902
FUS	418	100	418	45,300
STR	59	10	6	650
TOTALS	3,136		2,725	295,319

MARKET ADJUSTMENTS

TYPE	MDL	EFF. AREA	TOT ADJ PTS	EFF. BASE RATE	REPL. COST NEW	AYB	EYB	ECON	FNCT		NORM	% COND
0100	01	2,725	124.2000	117.99	321,523	2006	2006	0	0	0	8.15	91.85

1 SINGLE FAM – 100% - 2024 Heated Area: 2369 HX Base Yr

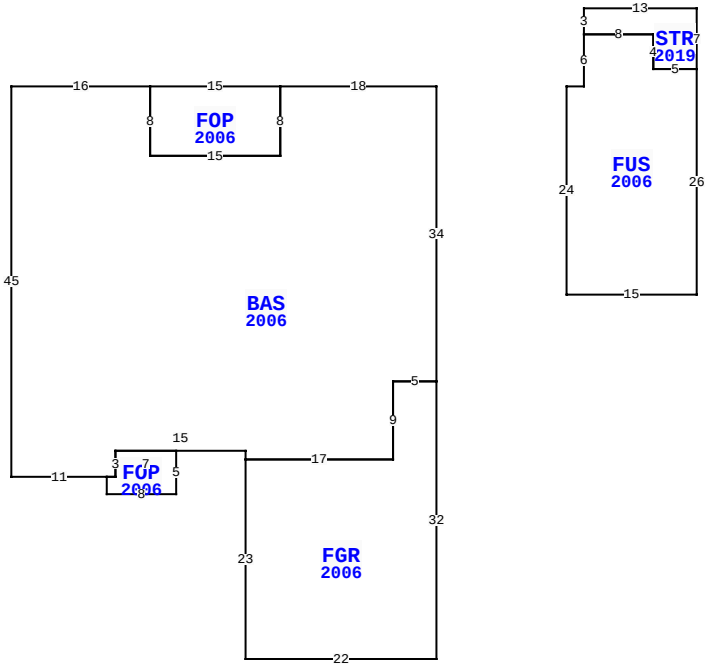

86010 EVERGREEN PL, YULEE

BLD DATE	03/14/2023 NW	LGL DATE	
XF DATE		LAND DATE	
INC DATE		AG DATE	

NASSAU COUNTY PROPERTY

PAGE 1 of 1 4

VALUATION SUMMARY

VALUATION BY		STANDARD
Tax Group: 4	Tax Dist:	
BUILDING MARKET VALUE		295,319
TOTAL MARKET OB/XF VALUE		59,880
TOTAL LAND VALUE - MARKET		55,000
TOTAL MARKET VALUE		410,199
SOH/AGL Deduction		0
ASSESSED VALUE		410,199
TOTAL EXEMPTION VALUE	13	410,199
BASE TAXABLE VALUE		0
TOTAL JUST VALUE		410,199
NCON VALUE		56,582
INCOME VALUE		
PREVIOUS YEAR MKT VALUE		340,414

PERMIT NUM	DESCRIPTION	AMT	ISSUED
230010068	49X26 SCRN ENCL	11,000	08/07/2023
230009076	FIBERGLASS POOL	92,000	07/17/2023
B25592	REPAIR/RRF	0	01/01/2012
C0516111	CO ISSUED	0	04/01/2005
B0516111	NEW CONSTR	0	04/01/2005

SALES DATA

OFF RECORD Number	DATE	TYPE INST	Q U /	V I /	RSN CD	SALE PRICE
1404/1377	4/17/2006	WD	Q	I		252,100
GRANTOR: MATTAMY (JACKSONVILLE						
GRANTEE: ROBBINS BRUCE LEE &						
1337/1410	8/01/2005	WD	U	V	19	2,360,000
GRANTOR: MARSH CREEK DEVELOPME						
GRANTEE: MATTAMY (JACKSONVIL						

BUILDING NOTES

BUILDING DIMENSIONS

BAS=[YR=2006] W18 FOP=[YR=2006] W15 S8 E15 N8$ S8 W15 N8 W16 S45 E11 FOP=[YR=2006] S2 E8 N5 W7 S3 W1$ E1 N3 E15 S1 FGR=[YR=2006] S23 E22 N32 W5 S9 W17$ E17 N9 E5 N34$ PTR= E15 FUS=[YR=2006] E2 N6 STR=[YR=2019] N3 E13 S7 W5 N4 W8$ E8 S4 E5 S26 W15 N24$ W15$.

EXTRA FEATURES

LN	OB/XF CODE	DESCRIPTION	BLD	CAP	L	W	UNITS	UT	Adj R	ADJ UNIT PRICE	ORIG COND	YEAR ON	YEAR ACTUAL	Q	% COND	OB/XF MKT VALUE	NOTES
1	0811	CONCRETE B	0	100	0	0	729.00	SF	5.20	5.20	100	2006	2006	3	87	3,298	
2	0866	POOL FIBER	0	100	28	12	336.00	SF	72.00	72.00	100	2024	2023		100	24,192	
3	0911	SCRN RM A	0	100	26	50	1,300.00	SF	17.50	17.50	100	2024	2023		100	22,750	
4	0855	CONC PAVER	0	100	0	0	964.00	SF	10.00	10.00	100	2024	2023		100	9,640	

LAND DESCRIPTION

TOTAL OB/XF 59,880

LN	USE CODE	CLS	LAND USE DESCRIPTION	CAP	RD	LOC ZONE	FRONT	DEPTH	TOT LND UTS	UNIT TYPE	DT	DPTH FACT	% COND	TOT ADJ	UNIT PRICE	ADJ UNIT PRICE	LAND VALUE	OTHER ADJUSTMENTS AND NOTES	YEAR	DENSITY	DECL	FRZ	YR	CONSRV
1	000100	C	SFR	100		RSF-2	0.00	0.00	1.00	LT		1.00	1.00	1.00	55,000.00	55,000.00	55,000							

REVIEW DATE 11/27/2023 BY NW Total Acres: 0.00 Total Land Value: 55,000 Market: 0 Agricultural: 0 Common: 55,000 PRINTED 08/06/2024 BY SYS