LOT 11F
NASSAU CROSSING TOWNHOMES PH 2
OR 2486/1754

LAMBERT STEPHANI
86496 SHORTLINE CIRCLE
YULEE, FL 32097

2024

42-2N-27-1091-011F-0000

NASSAU COUNTY PROPERTY

BUILDING CHARACTERISTICS

ELEMENT	CD	CONSTRUCTION
Exterior Wall	31	HARDIE BRD 100
Roof Structur	03	GABLE/HIP 100
Roof Cover	03	COMP SHNGL 100
Interior Wall	05	DRYWALL 100
Interior Floo	11	CLAY TILE 60
Interior Floo	14	CARPET 40
Air Condition	03	CENTRAL 100
Heating Type	04	AIR DUCTED 100
Bedrooms		2 100
Bathrooms		2.5 100
Frame	02	WOOD FRAME 100
Stories	2.	2. 100
Units		0 100
Occupancy	00	NONE 100
Quality	03	Quality Level 03
DOR CODE	0100	SINGLE FAMILY
MAP NUM		MKT AREA 04
NEIGHBORHOOD/LOC	4092.00	

AREA TYPE	TOTAL GROSS AREA	PCT OF BASE	TOT ADJ AREA	SUBAREA MARKET VALUE
BAS	532	100	532	63,494
FGR	280	55	154	18,380
FOP	36	30	11	1,313
FOP	72	30	22	2,626
FUS	636	100	636	75,907
STR	48	10	5	597
TOTALS	1,604		1,360	162,316

MARKET ADJUSTMENTS

TYPE	MDL	EFF. AREA	TOT ADJ PTS	EFF. BASE RATE	REPL. COST NEW	AYB	EYB	ECON	FNCT		NORM	% COND
0320	01	1,360	125.6320	119.35	162,316	2022	2022	0	0	0	0.00	100.00

1 TOWNHOUSE - 100% - 2023 Heated Area: 1168 HX Base Yr 2023

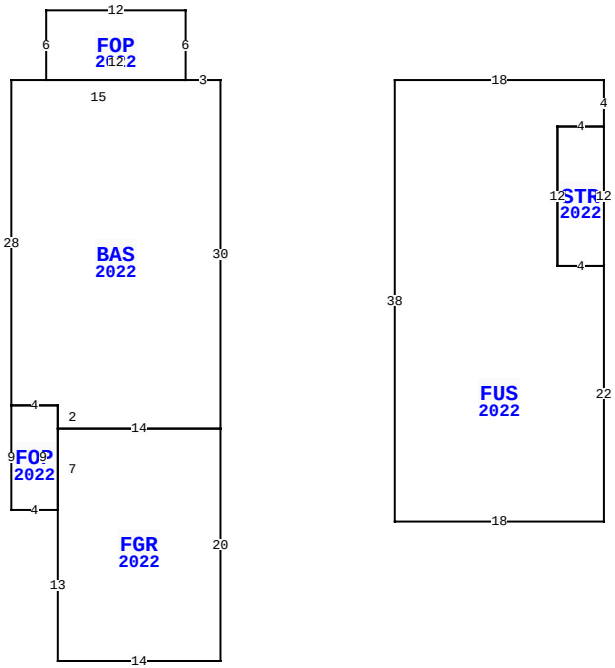

86496 SHORTLINE CIR, YULEE

BLD DATE	04/17/2023 NW	LGL DATE	
XF DATE		LAND DATE	
INC DATE		AG DATE	

VALUATION SUMMARY

VALUATION BY		STANDARD
Tax Group: 4	Tax Dist:	
BUILDING MARKET VALUE		162,316
TOTAL MARKET OB/XF VALUE		2,093
TOTAL LAND VALUE - MARKET		40,000
TOTAL MARKET VALUE		204,409
SOH/AGL Deduction		0
ASSESSED VALUE		204,409
TOTAL EXEMPTION VALUE	HX HB	50,000
BASE TAXABLE VALUE		154,409
TOTAL JUST VALUE		204,409
NCON VALUE		0
INCOME VALUE		
PREVIOUS YEAR MKT VALUE		204,409

PERMIT NUM	DESCRIPTION	AMT	ISSUED
22017368	CO ISSUED	0	11/23/2022
21009173	NEW CONSTR	168,846	09/01/2021

SALES DATA

OFF RECORD Number	DATE	TYPE INST	Q U	V I	RSN CD	SALE PRICE
2605/1032	11/29/2022	SW	Q	I	01	255,000
GRANTOR: D R HORTON INC-JACKSO						
GRANTEE: LAMBERT STEPHANI						
2495/0837	9/09/2021	WD	Q	V	05	448,000
GRANTOR: PATRIOT RIDGE LLP						
GRANTEE: D R HORTON INC-JACK						

BUILDING NOTES

BUILDING DIMENSIONS

BAS=[YR=2022] W3 FOP=[YR=2022] N6 W12 S6 E12$ W15 S28
FOP=[YR=2022] S9 E4 FGR=[YR=2022] S13 E14 N20 W14 S7$ N9 W4$
E4 S2 E14 N30$ PTR=E15 FUS=[YR=2022] E18 S4 STR=[YR=2022] S12
W4 N12 E4$ W4 S12 E4 S22 W18 N38$ W15$.

EXTRA FEATURES

LN	OB/XF CODE	DESCRIPTION	BLD	CAP	L	W	UNITS	UT	Adj R	ADJ UNIT PRICE	ORIG COND	YEAR ON	YEAR ACTUAL	Q	% COND	OB/XF MKT VALUE	NOTES
1	0810	CONCRETE A	0	100	0	0	322.00	SF	6.50	6.50	100	2022	2022	3	100	2,093	

LAND DESCRIPTION

TOTAL OB/XF 2,093

LN	USE CODE	CLS	LAND USE DESCRIPTION	CAP	RD	LOC ZONE	FRONT	DEPTH	TOT LND UTS	UNIT TYPE	DT	DPTH FACT	% COND	TOT ADJ	UNIT PRICE	ADJ UNIT PRICE	LAND VALUE	OTHER ADJUSTMENTS AND NOTES	YEAR	DENSITY	DECL	FRZ	YR	CONSRV
1	000100	C	SFR	100		PUD	0.00	0.00	1.00	LT		1.00	1.00	1.00	40,000.00	40,000.00	40,000							

REVIEW DATE 12/06/2022 BY NW Total Acres: 0.00 Total Land Value: 40,000 Market: 0 Agricultural: 0 Common: 40,000 PRINTED 08/06/2024 BY SYS