LOT 10F
NASSAU CROSSING TOWNHOMES PH 2
OR 2486/1754

KERN PHILLIP E II & NAVANA
86440 SHORTLINE CIR
YULEE, FL 32097

2024

42-2N-27-1091-010F-0000

NASSAU COUNTY PROPERTY

BUILDING CHARACTERISTICS

ELEMENT	CD	CONSTRUCTION
Exterior Wall	31	HARDIE BRD 100
Roof Structur	03	GABLE/HIP 100
Roof Cover	03	COMP SHNGL 100
Interior Wall	05	DRYWALL 100
Interior Floo	11	CLAY TILE 60
Interior Floo	14	CARPET 40
Air Condition	03	CENTRAL 100
Heating Type	04	AIR DUCTED 100
Bedrooms		3 100
Bathrooms		1.5 100
Frame	02	WOOD FRAME 100
Stories	1.	1. 100
Units		1 100
Quality	03	Quality Level 03
DOR CODE	0100	SINGLE FAMILY
MAP NUM		MKT AREA 04
NEIGHBORHOOD/LOC	4092.00	

AREA TYPE	TOTAL GROSS AREA	PCT OF BASE	TOT ADJ AREA	SUBAREA MARKET VALUE
BAS	532	100	532	60,728
FGR	280	55	154	17,579
FOP	36	30	11	1,256
FOP	72	30	22	2,511
FUS	800	100	800	91,320
STR	48	10	5	571
TOTALS	1,768		1,524	173,965

MARKET ADJUSTMENTS

TYPE	MDL	EFF. AREA	TOT ADJ PTS	EFF. BASE RATE	REPL. COST NEW	AYB	EYB	ECON	FNCT		NORM	% COND
0320	01	1,524	120.1560	114.15	173,965	2023	2023	0	0	0	0.00	100.00

1 TOWNHOUSE - 100% - 2024 Heated Area: 1332 HX Base Yr 2024

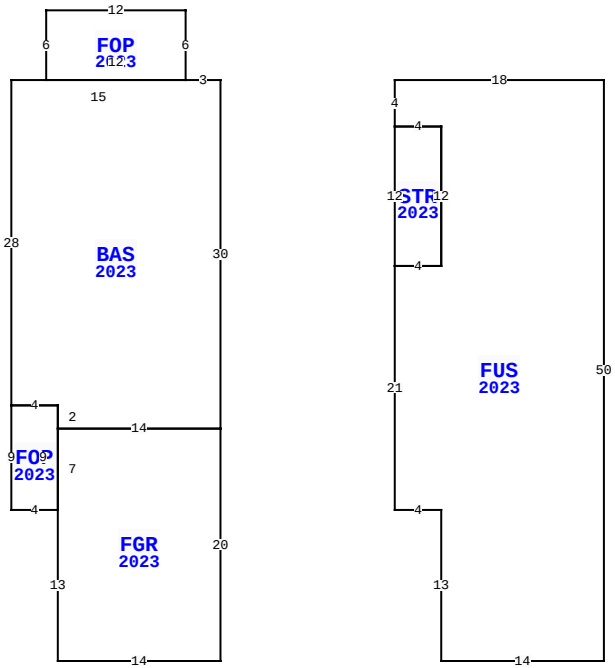

86440 SHORTLINE CIR, YULEE

BLD DATE		LGL DATE	
XF DATE		LAND DATE	
INC DATE		AG DATE	

VALUATION SUMMARY

VALUATION BY		STANDARD
Tax Group: 4	Tax Dist:	
BUILDING MARKET VALUE		173,965
TOTAL MARKET OB/XF VALUE		2,184
TOTAL LAND VALUE - MARKET		40,000
TOTAL MARKET VALUE		216,149
SOH/AGL Deduction		0
ASSESSED VALUE		216,149
TOTAL EXEMPTION VALUE	HX HB VX	55,000
BASE TAXABLE VALUE		161,149
TOTAL JUST VALUE		216,149
NCON VALUE		176,149
INCOME VALUE		
PREVIOUS YEAR MKT VALUE		40,000

PERMIT NUM	DESCRIPTION	AMT	ISSUED
23001912	CO ISSUED	0	02/13/2023
21009104	NEW CONSTR	191,924	09/01/2021

SALES DATA

OFF RECORD Number	DATE	TYPE INST	Q U	V I	RSN CD	SALE PRICE
2620/0328	2/16/2023	SW	Q	I	01	269,000
GRANTOR: D R HORTON INC-JACKSO						
GRANTEE: KERN PHILLIP E II &						
2495/0837	9/09/2021	WD	Q	V	05	448,000
GRANTOR: PATRIOT RIDGE LLP						
GRANTEE: D R HORTON INC-JACK						

BUILDING NOTES

BUILDING DIMENSIONS

BAS2023=W3 FOP2023=N6 W12 S6
E12$ W15 S28 FOP2023=S9 E4
FGR2023= S13 E14 N20 W14 S7$
N9 W4$ E4 S2 E14 N30$ PTR=E15
FUS2023=E18 S50 W14 N13 W4 N21
STR2023=N12 E4 S12 W4$ E4 N12
W4 N4$ W15$.

EXTRA FEATURES

LN	OB/XF CODE	DESCRIPTION	BLD	CAP	L	W	UNITS	UT	Adj R	ADJ UNIT PRICE	ORIG COND	YEAR ON	YEAR ACTUAL	Q	% COND	OB/XF MKT VALUE	NOTES
1	0810	CONCRETE A	0	100	0	0	336.00	SF	6.50	6.50	100	2024	2023		100	2,184	

LAND DESCRIPTION

TOTAL OB/XF 2,184

LN	USE CODE	CLS	LAND USE DESCRIPTION	CAP	RD	LOC ZONE	FRONT	DEPTH	TOT LND UTS	UNIT TYPE	DT	DPTH FACT	% COND	TOT ADJ	UNIT PRICE	ADJ UNIT PRICE	LAND VALUE	OTHER ADJUSTMENTS AND NOTES	YEAR	DENSITY	DECL	FRZ	YR	CONSRV
1	000100	C	SFR	100		PUD	0.00	0.00	1.00	LT		1.00	1.00	1.00	40,000.00	40,000.00	40,000							

REVIEW DATE 12/15/2022 BY NW Total Acres: 0.00 Total Land Value: 40,000 Market: 0 Agricultural: 0 Common: 40,000 PRINTED 08/06/2024 BY SYS