LOT 4A
NASSAU CROSSING TOWNHOMES PH 1
OR 2379/142

JACKSON DAVID J
86616 MAINLINE RD
YULEE, FL 32097

**2024**

**42-2N-27-1091-004A-0000**

## BUILDING CHARACTERISTICS

| ELEMENT | CD | CONSTRUCTION |
|---|---|---|
| Exterior Wall | 31 | HARDIE BRD 100 |
| Roof Structur | 03 | GABLE/HIP 100 |
| Roof Cover | 03 | COMP SHNGL 100 |
| Interior Wall | 05 | DRYWALL 100 |
| Interior Floo | 11 | CLAY TILE 60 |
| Interior Floo | 14 | CARPET 40 |
| Air Condition | 03 | CENTRAL 100 |
| Heating Type | 04 | AIR DUCTED 100 |
| Bedrooms | | 3 100 |
| Bathrooms | | 2.5 100 |
| Frame | 02 | WOOD FRAME 100 |
| Stories | 2. | 2. 100 |
| Units | | 0 100 |
| Occupancy | 00 | NONE 100 |
| Quality | 03 | Quality Level 03 |
| DOR CODE | 0100 | SINGLE FAMILY |
| MAP NUM | | MKT AREA 04 |
| NEIGHBORHOOD/LOC | 4092.00 | |

| AREA TYPE | TOTAL GROSS AREA | PCT OF BASE | TOT ADJ AREA | SUBAREA MARKET VALUE |
|---|---|---|---|---|
| BAS | 532 | 100 | 532 | 61,965 |
| FGR | 280 | 55 | 154 | 17,937 |
| FOP | 36 | 30 | 11 | 1,282 |
| FOP | 72 | 30 | 22 | 2,562 |
| FUS | 800 | 100 | 800 | 93,180 |
| STR | 48 | 10 | 5 | 582 |
| TOTALS | 1,768 | | 1,524 | 177,507 |

## MARKET ADJUSTMENTS

| TYPE | MDL | EFF. AREA | TOT ADJ PTS | EFF. BASE RATE | REPL. COST NEW | AYB | EYB | ECON | FNCT | | NORM | % COND |
|---|---|---|---|---|---|---|---|---|---|---|---|---|
| 0320 | 01 | 1,524 | 123.2160 | 117.06 | 178,399 | 2021 | 2021 | 0 | 0 | 0 | 0.50 | 99.50 |

1 TOWNHOUSE - 0% - 0 Heated Area: 1332 HX Base Yr

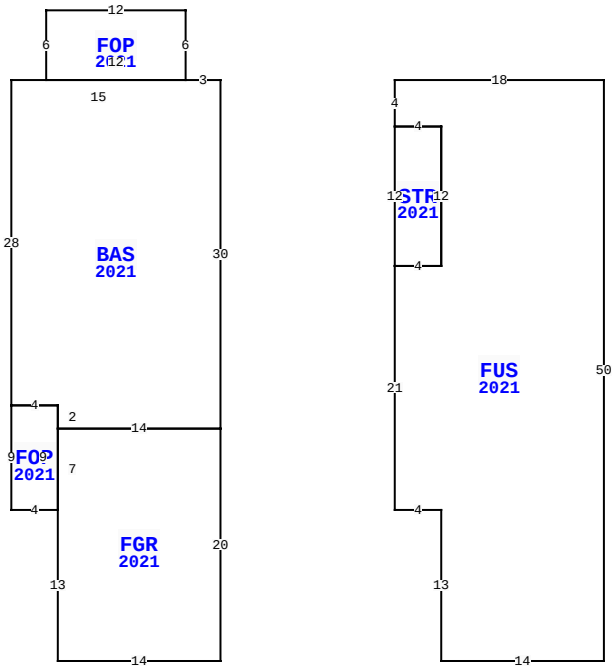


86616 MAINLINE RD, YULEE

| | | | |
|---|---|---|---|
| BLD DATE | 04/17/2023 NW | LGL DATE | |
| XF DATE | | LAND DATE | |
| INC DATE | | AG DATE | |

## NASSAU COUNTY PROPERTY

PAGE 1 of 1 4

### VALUATION SUMMARY

| | |
|---|---|
| VALUATION BY | STANDARD |
| Tax Group: 4 | Tax Dist: |
| BUILDING MARKET VALUE | 177,507 |
| TOTAL MARKET OB/XF VALUE | 1,519 |
| TOTAL LAND VALUE - MARKET | 40,000 |
| TOTAL MARKET VALUE | 219,026 |
| SOH/AGL Deduction | 0 |
| ASSESSED VALUE | 219,026 |
| TOTAL EXEMPTION VALUE | 0 |
| BASE TAXABLE VALUE | 219,026 |
| TOTAL JUST VALUE | 219,026 |
| NCON VALUE | 0 |
| INCOME VALUE | |
| PREVIOUS YEAR MKT VALUE | 219,933 |

| PERMIT NUM | DESCRIPTION | AMT | ISSUED |
|---|---|---|---|
| 20009653 | TOWNHOME | 179,165 | 10/13/2020 |

## SALES DATA

| OFF RECORD Number | DATE | TYPE INST | Q U / | V I / | RSN CD | SALE PRICE |
|---|---|---|---|---|---|---|
| 2492/1724 | 8/30/2021 | SW | Q | I | 01 | 224,000 |
| GRANTOR: D R HORTON INC-JACKSO | | | | | | |
| GRANTEE: JACKSON DAVID J | | | | | | |
| 2397/1158 | 10/01/2020 | WD | Q | V | 05 | 300,000 |
| GRANTOR: PATRIOT RIDGE LLP | | | | | | |
| GRANTEE: D R HORTON INC-JACK | | | | | | |

## BUILDING NOTES

## BUILDING DIMENSIONS

BAS=[YR=2021] W3 FOP=[YR=2021] N6 W12 S6 E12$ W15 S28
FOP=[YR=2021] S9 E4 FGR=[YR=2021] S13 E14 N20 W14 S7$ N9 W4$
E4 S2 E14 N30$ PTR=E15 FUS=[YR=2021] E18 S50 W14 N13 W4 N21
STR=[YR=2021] N12 E4 S12 W4$ E4 N12 W4 N4$ W15$.

## EXTRA FEATURES

| LN | OB/XF CODE | DESCRIPTION | BLD | CAP | L | W | UNITS | UT | Adj R | ADJ UNIT PRICE | ORIG COND | YEAR ON | YEAR ACTUAL | Q | % COND | OB/XF MKT VALUE | NOTES |
|---|---|---|---|---|---|---|---|---|---|---|---|---|---|---|---|---|---|
| 1 | 0811 | CONCRETE B | 0 | 0 | 0 | 0 | 295.00 | SF | 5.20 | 5.20 | 100 | 2021 | 2021 | 3 | 99 | 1,519 | |

## LAND DESCRIPTION

TOTAL OB/XF 1,519

| LN | USE CODE | CLS | LAND USE DESCRIPTION | CAP | RD | LOC ZONE | FRONT | DEPTH | TOT LND UTS | UNIT TYPE | DT | DPTH FACT | % COND | TOT ADJ | UNIT PRICE | ADJ UNIT PRICE | LAND VALUE | OTHER ADJUSTMENTS AND NOTES | YEAR | DENSITY | DECL | FRZ | YR | CONSRV |
|---|---|---|---|---|---|---|---|---|---|---|---|---|---|---|---|---|---|---|---|---|---|---|---|---|
| 1 | 000100 | C | SFR | 0 | | PUD | 0.00 | 0.00 | 1.00 | LT | | 1.00 | 1.00 | 1.00 | 40,000.00 | 40,000.00 | 40,000 | | | | | | | |

REVIEW DATE 10/07/2021 BY JH Total Acres: 0.00 Total Land Value: 40,000 Market: 0 Agricultural: 0 Common: 40,000 PRINTED 08/06/2024 BY SYS