PT JOHN LOWE GRANTS
SEC'S 42-2N-27E & 51-3N-27E
IN DBK 56/206,DBK 123/300,

FIRST BAPTIST CHURCH OF YULEE
P O BOX 344
YULEE, FL 32041-0344

2024

42-2N-27-0000-0042-0000

BUILDING CHARACTERISTICS

ELEMENT	CD	CONSTRUCTION
Exterior Wall	15	CONC BLOCK 100
Roof Structur	04	WOOD TRUSS 100
Roof Cover	03	COMP SHNGL 100
Interior Wall	04	PLYWOOD 90
Interior Wall	03	PLASTER 10
Interior Floo	14	CARPET 100
Ceiling	01	FIN.SUSPD 100
Air Condition	03	CENTRAL 100
Heating Type	04	AIR DUCTED 100
Fixtures		8 100
Frame	03	MASONRY 100
Common Wall		4 100
Story Height		12 100
RMS		3 100
Stories	1.	1. 100
Units		0 100
BUD8 Adjustme	04	DIST 01 100
Occupancy	00	NONE 100
Quality	03	Quality Level 03
DOR CODE	7100	CHURCHES
MAP NUM		MKT AREA 04
NEIGHBORHOOD/LOC	4051.00	

AREA TYPE	TOTAL GROSS AREA	PCT OF BASE	TOT ADJ AREA	SUBAREA MARKET VALUE
BAS	2,454	100	2,454	301,037
FOP	96	30	29	3,558
FOP	32	30	10	1,227
STP	20	10	2	246
TOTALS	2,602		2,495	306,067

MARKET ADJUSTMENTS

TYPE	MDL	EFF. AREA	TOT ADJ PTS	EFF. BASE RATE	REPL. COST NEW	AYB	EYB	ECON	FNCT		NORM	% COND
7101	04	2,495	99.8550	156.27	389,894	1964	1980	0	0	0	21.50	78.50

1 CHURCH – 0% - 0 Heated Area: 2454 HX Base Yr

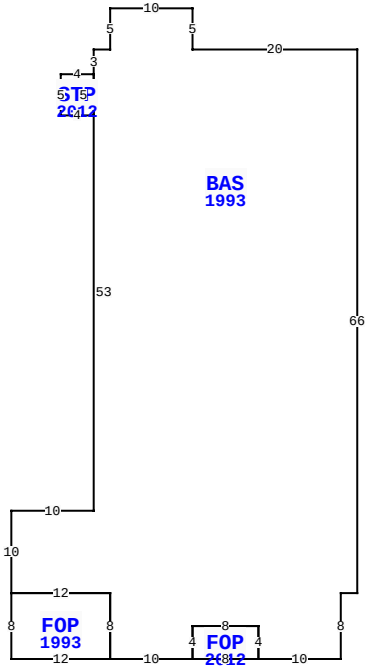

86584 PINEWOOD DR, YULEE

BLD DATE	08/04/2022	KK	LGL DATE	
XF DATE	08/04/2022	KK	LAND DATE	08/04/2022 KK
INC DATE			AG DATE	

NASSAU COUNTY PROPERTY

PAGE 1 of 2 4

VALUATION SUMMARY

VALUATION BY		STANDARD
Tax Group: 4	Tax Dist:	
BUILDING MARKET VALUE		606,545
TOTAL MARKET OB/XF VALUE		1,767
TOTAL LAND VALUE - MARKET		78,400
TOTAL MARKET VALUE		686,712
SOH/AGL Deduction		311,447
ASSESSED VALUE		375,265
TOTAL EXEMPTION VALUE	02	375,265
BASE TAXABLE VALUE		0
TOTAL JUST VALUE		686,712
NCON VALUE		0
INCOME VALUE		
PREVIOUS YEAR MKT VALUE		736,409

PERMIT NUM	DESCRIPTION	AMT	ISSUED
22008760	RE-ROOF	29,000	06/07/2022
E996439	NEW CONSTR	2,000	11/01/1999
B9906412	ADDITION	119,700	09/01/1999

SALES DATA

OFF RECORD Number	DATE	TYPE INST	Q / U	V / I	RSN CD	SALE PRICE
0272/0547	8/15/1978	WD	U	I	17	100
GRANTOR: LIL' CHAMP FOOD STORE						
GRANTEE: FIRST BAPTIST CHURC						
0123/0300	6/14/1944	WD	U	I	17	100
GRANTOR: PRINCE G E & MATTIE (						
GRANTEE: THE COLORED FIRST B						

BUILDING NOTES

BUILDING DIMENSIONS

BAS=[YR=1993] W20 N5 W10 S5 W2 S3 STP=[YR=2012] W4 S5 E4 N5$ S53 W10 S10 FOP=[YR=1993] S8 E12 N8 W12$ E12 S8 E10 FOP=[YR=2012] E8 N4 W8 S4$ N4 E8 S4 E10 N8 E2 N66$.

EXTRA FEATURES

LN	OB/XF CODE	DESCRIPTION	BLD	CAP	L	W	UNITS	UT	Adj R	ADJ UNIT PRICE	ORIG COND	YEAR ON	YEAR ACTUAL	Q	% COND	OB/XF MKT VALUE	NOTES
1	0810	CONCRETE A	0	0	18	8	144.00	SF	6.50	6.50	100	1983	1983	3	41	384	
2	0810	CONCRETE A	0	0	0	0	168.00	SF	6.50	6.50	100	2000	2000	3	79	863	
3	0810	CONCRETE A	0	0	0	0	246.00	SF	6.50	6.50	100	1980	1980	3	32.5	520	

LAND DESCRIPTION

TOTAL OB/XF 1,767

LN	USE CODE	CLS	LAND USE DESCRIPTION	CAP	RD	LOC ZONE	FRONT	DEPTH	TOT LND UTS	UNIT TYPE	DT	DPTH FACT	% COND	TOT ADJ	UNIT PRICE	ADJ UNIT PRICE	LAND VALUE	OTHER ADJUSTMENTS AND NOTES	YEAR	DENSITY	DECL	FRZ	YR	CONSRV
1	007100	C	CHURCH	0	0006	RM	90.00	190.00	2.00	LT		1.00	1.00	0.98	40,000.00	39,200.00	78,400							

REVIEW DATE 08/04/2022 BY KK Total Acres: 0.00 Total Land Value: 78,400 Market: 0 Agricultural: 0 Common: 78,400 PRINTED 08/06/2024 BY SYS

PT JOHN LOWE GRANTS
SEC'S 42-2N-27E & 51-3N-27E
IN DBK 56/206,DBK 123/300,

FIRST BAPTIST CHURCH OF YULEE
P O BOX 344
YULEE, FL 32041-0344

2024

42-2N-27-0000-0042-0000

BUILDING CHARACTERISTICS

ELEMENT	CD	CONSTRUCTION
Exterior Wall	15	CONC BLOCK 100
Roof Structur	04	WOOD TRUSS 100
Roof Cover	03	COMP SHNGL 100
Interior Wall	05	DRYWALL 100
Interior Floo	07	CORK/VTILE 80
Interior Floo	14	CARPET 20
Ceiling	01	FIN.SUSPD 100
Air Condition	03	CENTRAL 100
Heating Type	04	AIR DUCTED 100
Fixtures		2 100
Frame	03	MASONRY 100
Common Wall		4 100
Story Height		10 100
RMS		2 100
Stories	1.	1. 100
Units		0 100
BUD8 Adjustme	04	DIST 01 100
Occupancy	00	NONE 100
Quality	03	Quality Level 03
DOR CODE	7100	CHURCHES
MAP NUM		MKT AREA 04
NEIGHBORHOOD/LOC	4051.00	

AREA TYPE	TOTAL GROSS AREA	PCT OF BASE	TOT ADJ AREA	SUBAREA MARKET VALUE
BAS	960	100	960	111,979
BAS	1,612	100	1,612	188,032
STP	16	10	2	234
STP	16	10	2	234
TOTALS	2,604		2,576	300,478

MARKET ADJUSTMENTS

TYPE	MDL	EFF. AREA	TOT ADJ PTS	EFF. BASE RATE	REPL. COST NEW	AYB	EYB	ECON	FNCT		NORM	% COND
7101	04	2,576	90.8960	142.25	366,436	1966	1987	0	0	0	18.00	82.00

2 CHURCH – 0% - 0 Heated Area: 2572 HX Base Yr

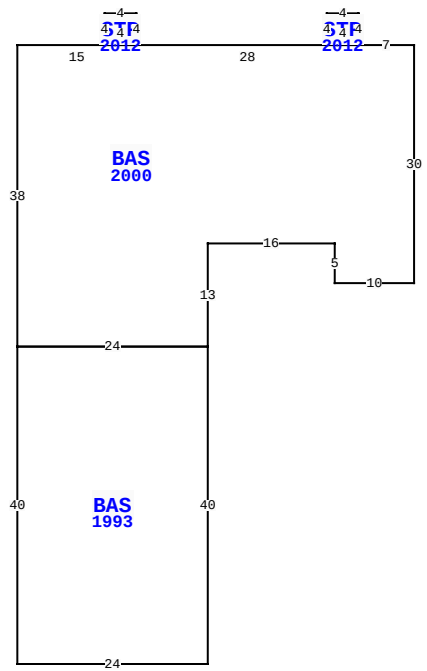

86584 PINEWOOD DR, YULEE

BLD DATE	08/04/2022	KK	LGL DATE	
XF DATE	08/04/2022	KK	LAND DATE	08/04/2022 KK
INC DATE			AG DATE	

NASSAU COUNTY PROPERTY

PAGE 2 of 2 4

VALUATION SUMMARY

VALUATION BY		STANDARD
Tax Group: 4	Tax Dist:	
BUILDING MARKET VALUE		606,545
TOTAL MARKET OB/XF VALUE		1,767
TOTAL LAND VALUE - MARKET		78,400
TOTAL MARKET VALUE		686,712
SOH/AGL Deduction		311,447
ASSESSED VALUE		375,265
TOTAL EXEMPTION VALUE	02	375,265
BASE TAXABLE VALUE		0
TOTAL JUST VALUE		686,712
NCON VALUE		0
INCOME VALUE		
PREVIOUS YEAR MKT VALUE		736,409

PERMIT NUM	DESCRIPTION	AMT	ISSUED

SALES DATA

OFF RECORD Number	DATE	TYPE INST	Q / U	V / I	RSN CD	SALE PRICE
0272/0547	8/15/1978	WD	U	I	17	100
GRANTOR: LIL' CHAMP FOOD STORE						
GRANTEE: FIRST BAPTIST CHURC						
0123/0300	6/14/1944	WD	U	I	17	100
GRANTOR: PRINCE G E & MATTIE (						
GRANTEE: THE COLORED FIRST B						

BUILDING NOTES

BUILDING DIMENSIONS

BAS=[YR=2000] W7 STP=[YR=2012] N4 W4 S4 E4$ W28
STP=[YR=2012] N4 W4 S4 E4$ W15 S38 BAS=[YR=1993] S40 E24
N40 W24$ E24 N13 E16 S5 E10 N30$.

EXTRA FEATURES

L N	OB/XF CODE	DESCRIPTION	BLD	CAP	L	W	UNITS	UT	Adj R	ADJ UNIT PRICE	ORIG COND	YEAR ON	YEAR ACTUAL	Q	% COND	OB/XF MKT VALUE	NOTES

LAND DESCRIPTION

TOTAL OB/XF 0

L N	USE CODE	CLS	LAND USE DESCRIPTION	CAP	R D	LOC ZONE	FRONT	DEPTH	TOT LND UTS	UNIT TYPE	D T	DPTH FACT	% COND	TOT ADJ	UNIT PRICE	ADJ UNIT PRICE	LAND VALUE	OTHER ADJUSTMENTS AND NOTES	YEAR	DENSITY	DECL	FRZ	YR	CONSRV

REVIEW DATE 08/04/2022 BY KK Total Acres: 0.00 Total Land Value: 78,400 Market: 0 Agricultural: 0 Common: 78,400 PRINTED 08/06/2024 BY SYS