TRACT A
PT OR 332 PG 186
ST MARYS HIGHLANDS PB 5 12/13

BRADDOCK CAROL E
P O BOX 511
CALLAHAN, FL 32011-0511

2024

41-4N-23-2100-000A-0000

NASSAU COUNTY PROPERTY

BUILDING CHARACTERISTICS

ELEMENT	CD	CONSTRUCTION
Exterior Wall	10	ABOVE AVG 70
Exterior Wall	15	CONC BLOCK 30
Roof Structur	08	IRREGULAR 100
Roof Cover	03	COMP SHNGL 100
Interior Wall	05	DRYWALL 100
Interior Floo	12	HARDWOOD 60
Interior Floo	14	CARPET 40
Air Condition	03	CENTRAL 100
Heating Type	04	AIR DUCTED 100
Bedrooms		3 100
Bathrooms		3 100
Frame	02	WOOD FRAME 100
Stories	2.5	2.5 100
Units		0 100
Occupancy	00	NONE 100
Quality	03	Quality Level 03
DOR CODE	0100	SINGLE FAMILY
MAP NUM		MKT AREA 09
NEIGHBORHOOD/LOC	9004.00	

AREA TYPE	TOTAL GROSS AREA	PCT OF BASE	TOT ADJ AREA	SUBAREA MARKET VALUE
BAS	1,974	100	1,974	214,610
DCK	70	10	7	761
FGR	832	55	458	49,793
FGR	1,334	55	734	79,799
FOP	75	30	22	2,392
FOP	192	30	58	6,306
FOP	256	30	77	8,371
FSP	256	40	102	11,089
FUS	755	100	755	82,082
TOTALS	5,744		4,187	455,204

MARKET ADJUSTMENTS

TYPE	MDL	EFF. AREA	TOT ADJ PTS	EFF. BASE RATE	REPL. COST NEW	AYB	EYB	ECON	FNCT		NORM	% COND
0900	01	4,187	96.8000	121.00	506,627	2002	2002	0	0	0	10.15	89.85

1 SNGL FAM – 100% - 2003 Heated Area: 2729 HX Base Yr 2003

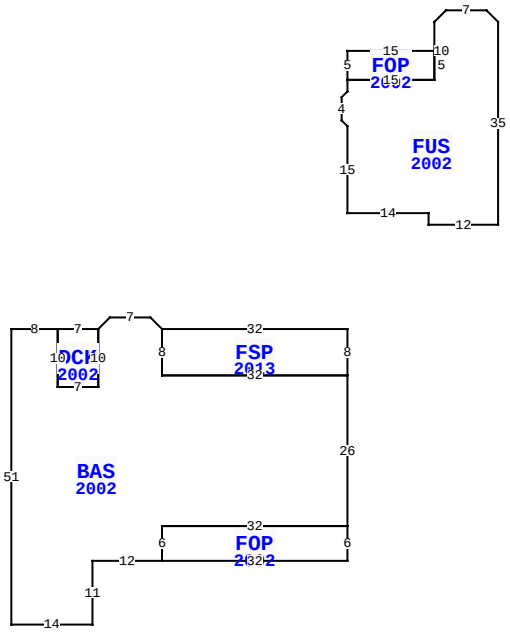

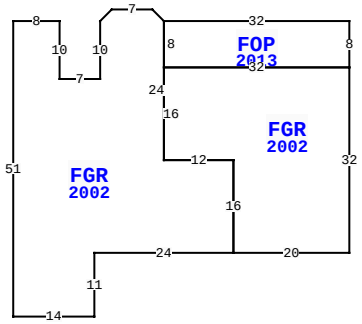

2852 TWO WATER TR, HILLIARD

BLD DATE		LGL DATE	
XF DATE		LAND DATE	
INC DATE		AG DATE	

NASSAU COUNTY PROPERTY — VALUATION SUMMARY

VALUATION BY		STANDARD
Tax Group: 4	Tax Dist:	
BUILDING MARKET VALUE		464,530
TOTAL MARKET OB/XF VALUE		18,044
TOTAL LAND VALUE - MARKET		80,000
TOTAL MARKET VALUE		562,574
SOH/AGL Deduction		291,468
ASSESSED VALUE		271,106
TOTAL EXEMPTION VALUE	HX HB WX	55,000
BASE TAXABLE VALUE		216,106
TOTAL JUST VALUE		562,574
NCON VALUE		0
INCOME VALUE		
PREVIOUS YEAR MKT VALUE		498,443

PERMIT NUM	DESCRIPTION	AMT	ISSUED
B018669	NEW CONSTR	240,000	08/01/2001
6515	REMODEL	11,840	06/07/1990

SALES DATA

OFF RECORD Number	DATE	TYPE INST	Q U /	V I /	RSN CD	SALE PRICE
0332/0186	3/01/1981	MS	U	V		9,000
GRANTOR:						
GRANTEE:						
0315/0335	5/01/1980	QC	Q	V		2,100
GRANTOR:						
GRANTEE:						

BUILDING NOTES

BUILDING DIMENSIONS

FSP=[YR=2013] W32 BAS=[YR=2002] U2 L2 W7 D2 L2
DCK=[YR=2002] W7 S10 E7 N10$ S10 W7 N10 W8 S51 E14 N11 E12
FOP=[YR=2002] E32 N6 W32 S6$ N6 E32 N26 W32 N8$ S8 E32
N8$PTR=E40 FGR=[YR=2002] E8 S10 E7 N10 R2 U2 E7 D2 R2
FOP=[YR=2013] E32 S8 FGR=[YR=2002] S32 W20 N16 W12 N16 E32$
W32 N8$ S24 E12 S16 W24 S11 W14 N51$ W40$ PTR=N20
FUS=[YR=2002] N15 L1 U1 N4 R1 U1 N2 FOP=[YR=2002] N5 E15
S5 W15$ E15 N10 U2 R2 E7 D2 R2 S35 W12 N2 W14$S20$.

EXTRA FEATURES

LN	OB/XF CODE	DESCRIPTION	BLD	CAP	L	W	UNITS	UT	Adj R	ADJ UNIT PRICE	ORIG COND	YEAR ON	YEAR ACTUAL	Q	% COND	OB/XF MKT VALUE	NOTES
1	0504	FP-ELECTRI	0	100	0	0	1.00	UT	2,000.00	2,000.00	100	2002	2002	3	86	1,720	
2	0968	STAIRS	0	100	0	0	1.00	SF	1,000.00	1,000.00	100	2002	2002	3	100	1,000	
3	0300	BOAT DCK W	0	100	30	3	90.00	SF	40.00	40.00	100	1998	1998	3	26	936	
4	1242	WD DECK A	0	100	132	3	396.00	SF	5.00	5.00	100	2011	2011	3	50	990	
5	0812	CONCRETE C	0	100	0	0	3,453.00	SF	4.00	4.00	100	2017	2017	3	97	13,398	

LAND DESCRIPTION

TOTAL OB/XF 18,044

LN	USE CODE	CLS	LAND USE DESCRIPTION	CAP	RD	LOC ZONE	FRONT	DEPTH	TOT LND UTS	UNIT TYPE	DT	DPTH FACT	% COND	TOT ADJ	UNIT PRICE	ADJ UNIT PRICE	LAND VALUE	OTHER ADJUSTMENTS AND NOTES	YEAR	DENSITY	DECL	FRZ	YR	CONSRV
1	000132	C	SFR RIVER	100	0007	OR	0.00	0.00	1.00	LT		1.00	1.00	1.00	80,000.00	80,000.00	80,000							

REVIEW DATE 07/30/2024 BY WWA Total Acres: 0.00 Total Land Value: 80,000 Market: 0 Agricultural: 0 Common: 80,000 PRINTED 08/06/2024 BY SYS

TRACT A
PT OR 332 PG 186
ST MARYS HIGHLANDS PB 5 12/13

BRADDOCK CAROL E
P O BOX 511
CALLAHAN, FL 32011-0511

2024

41-4N-23-2100-000A-0000

NASSAU COUNTY PROPERTY

BUILDING CHARACTERISTICS

ELEMENT	CD	CONSTRUCTION
Exterior Wall	12	CEDAR 100
Roof Structur	03	GABLE/HIP 100
Roof Cover	01	MINIMUM 100
Interior Wall	01	MINIMUM 100
Interior Floo	09	PINE WOOD 100
Air Condition	01	NONE 100
Heating Type	01	NONE 100
Bedrooms		1 100
Bathrooms		1 100
Frame	02	WOOD FRAME 100
Stories	1.	1. 100
Units		0 100
Occupancy	00	NONE 100
Quality	03	Quality Level 03

DOR CODE	0100	SINGLE FAMILY	
MAP NUM		MKT AREA	09
NEIGHBORHOOD/LOC	9004.00		

AREA TYPE	TOTAL GROSS AREA	PCT OF BASE	TOT ADJ AREA	SUBAREA MARKET VALUE
BAS	400	100	400	7,106
UOP	384	20	77	1,368
USP	160	30	48	853
TOTALS	944		525	9,326

MARKET ADJUSTMENTS

TYPE	MDL	EFF. AREA	TOT ADJ PTS	EFF. BASE RATE	REPL. COST NEW	AYB	EYB	ECON	FNCT	PD	NORM	% COND
0100	01	525	93.5000	88.82	46,630	1990	1990	0	0	20	16.50	20.00

2 SINGLE FAM – 0% - 2003 Heated Area: 400 HX Base Yr 2003

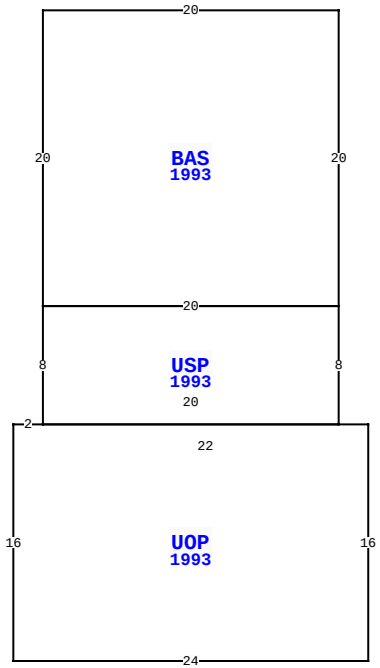

2852 TWO WATER TR, HILLIARD

BLD DATE		LGL DATE	
XF DATE		LAND DATE	
INC DATE		AG DATE	

VALUATION SUMMARY

VALUATION BY		STANDARD
Tax Group: 4	Tax Dist:	
BUILDING MARKET VALUE		464,530
TOTAL MARKET OB/XF VALUE		18,044
TOTAL LAND VALUE - MARKET		80,000
TOTAL MARKET VALUE		562,574
SOH/AGL Deduction		291,468
ASSESSED VALUE		271,106
TOTAL EXEMPTION VALUE	HX HB WX	55,000
BASE TAXABLE VALUE		216,106
TOTAL JUST VALUE		562,574
NCON VALUE		0
INCOME VALUE		
PREVIOUS YEAR MKT VALUE		498,443

PERMIT NUM	DESCRIPTION	AMT	ISSUED

SALES DATA

OFF RECORD Number	DATE	TYPE INST	Q U /	V I /	RSN CD	SALE PRICE
0332/0186	3/01/1981	MS	U	V		9,000
GRANTOR:						
GRANTEE:						
0315/0335	5/01/1980	QC	Q	V		2,100
GRANTOR:						
GRANTEE:						

BUILDING NOTES

BUILDING DIMENSIONS

BAS=[YR=1993] W20 S20 USP=[YR=1993] S8 UOP=[YR=1993] W2 S16 E24 N16 W22$ E20 N8 W20$ E20 N20$.

EXTRA FEATURES

L N	OB/XF CODE	DESCRIPTION	BLD	CAP	L	W	UNITS	UT	Adj R	ADJ UNIT PRICE	ORIG COND	YEAR ON	YEAR ACTUAL	Q	% COND	OB/XF MKT VALUE	NOTES

LAND DESCRIPTION

TOTAL OB/XF 0

L N	USE CODE	CLS	LAND USE DESCRIPTION	CAP	R D	LOC ZONE	FRONT	DEPTH	TOT LND UTS	UNIT TYPE	D T	DPTH FACT	% COND	TOT ADJ	UNIT PRICE	ADJ UNIT PRICE	LAND VALUE	OTHER ADJUSTMENTS AND NOTES	YEAR	DENSITY	DECL	FRZ	YR	CONSRV

REVIEW DATE 07/30/2024 BY WWA Total Acres: 0.00 Total Land Value: 80,000 Market: 0 Agricultural: 0 Common: 80,000 PRINTED 08/06/2024 BY SYS