SAMUEL CLARK & GEORGE S BROWN
GRANT IN SEC 41-4N-23E
IN OR 1726/260 & LOT 9

DAYSPRING HEALTH LLC/
PO BOX 1080
HILLIARD, FL 32046

2024

41-4N-23-0000-0002-0000

NASSAU COUNTY PROPERTY

BUILDING CHARACTERISTICS

ELEMENT	CD	CONSTRUCTION
Exterior Wall	19	COMMON BRK 100
Roof Structur	04	WOOD TRUSS 100
Roof Cover	03	COMP SHNGL 100
Interior Wall	03	PLASTER 100
Interior Floo	07	CORK/VTILE 100
Ceiling	02	F.NOT SUS 100
Air Condition	02	WINDOW 100
Heating Type	03	FORCED AIR 100
Fixtures		59 100
Frame	03	MASONRY 100
Common Wall		1 100
Story Height		9 100
RMS		20 100
Stories	1.	1. 100
Units		0 100
BUD8 Adjustme	04	DIST 01 100
Occupancy	00	NONE 100
Quality	03	Quality Level 03

DOR CODE	0600	RETIREMENT HOMES	
MAP NUM		MKT AREA	09
NEIGHBORHOOD/LOC	9002.00		

AREA TYPE	TOTAL GROSS AREA	PCT OF BASE	TOT ADJ AREA	SUBAREA MARKET VALUE
BAS	1,246	100	1,246	21,735
BAS	3,276	100	3,276	57,147
CAN	1,346	30	404	7,047
FST	98	50	49	855
FST	126	50	63	1,099
UST	45	40	18	314
TOTALS	6,137		5,056	88,197

MARKET ADJUSTMENTS

TYPE	MDL	EFF. AREA	TOT ADJ PTS	EFF. BASE RATE	REPL. COST NEW	AYB	EYB	ECON	FNCT		NORM	% COND
3901	04	5,056	96.3778	87.22	440,984	1950	1970	0	0	0	80.00	20.00

1 MOTEL – 0% - 0 Heated Area: 4522 HX Base Yr

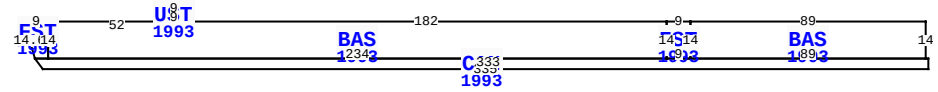

554820 US HWY 1, HILLIARD

BLD DATE	05/21/2024	REA	LGL DATE
XF DATE			LAND DATE
INC DATE			AG DATE

VALUATION SUMMARY

VALUATION BY	STANDARD
Tax Group: 4	Tax Dist:
BUILDING MARKET VALUE	421,343
TOTAL MARKET OB/XF VALUE	35,341
TOTAL LAND VALUE - MARKET	242,015
TOTAL MARKET VALUE	698,699
SOH/AGL Deduction	0
ASSESSED VALUE	698,699
TOTAL EXEMPTION VALUE	0
BASE TAXABLE VALUE	698,699
TOTAL JUST VALUE	698,699
NCON VALUE	0
INCOME VALUE	
PREVIOUS YEAR MKT VALUE	698,339

PERMIT NUM	DESCRIPTION	AMT	ISSUED
18001783	REMODEL	18,000	03/23/2018
R1700273	REPAIR/RRF	2,100	01/01/2017
B1023978	CO ISSUED	0	05/31/2011
M15863	H/AC	0	01/01/2011
B23978	ADDITION	132,023	10/01/2010
C23365	CO ISSUED	0	08/01/2010

SALES DATA

OFF RECORD Number	DATE	TYPE INST	Q U	V I	RSN CD	SALE PRICE
1726/0260	2/18/2011	WD	U	I	11	100
GRANTOR: ADKINS JOAN D TRUSTEE						
GRANTEE: DAYSPRING HEALTH LL						
1622/0799	5/29/2009	WD	U	V		40,000
GRANTOR: DAVIS CLINTON A & ANG						
GRANTEE: DAYSPRING HEALTH LL						

BUILDING NOTES

BUILDING DIMENSIONS

BAS=[YR=1993] W89 FST=[YR=1993] W9 BAS=[YR=1993] W182 UST=[YR=1993] N5W9 S5 E9$ W52 FST=[YR=1993] W9 D14 R4 E5N14 $S14CAN=[YR=1993] W5 D4 R3 E335N4W333 $ E234 N14$ S14 E9 N14$S14 E89 N14$.

EXTRA FEATURES

LN	OB/XF CODE	DESCRIPTION	BLD	CAP	L	W	UNITS	UT	Adj R	ADJ UNIT PRICE	ORIG COND	YEAR ON	YEAR ACTUAL	Q	% COND	OB/XF MKT VALUE	NOTES
1	0803	ASPHALT C	0	0	0	0	53,549.00	SF	2.00	2.00	20	1980	1980	3	20	21,420	
2	0940	SHEDS/PORT	0	0	26	11	286.00	SF	30.00	30.00	100	1980	1980	3	20	1,716	
3	0754	FOP	0	0	26	11	286.00	SF	15.00	15.00	100	1980	1980	3	20	858	
4	0811	CONCRETE B	0	0	0	0	640.00	SF	5.20	5.20	20	1995	1995	3	20	666	
5	0810	CONCRETE A	0	0	0	0	457.00	SF	6.50	6.50	20	1990	1990	3	20	594	
6	0940	SHEDS/PORT	0	0	11	9	99.00	SF	30.00	30.00	100	1960	1960	3	20	594	
7	0511	GARAGE CB-	0	0	28	16	448.00	SF	40.00	40.00	100	1970	1970	3	21	3,763	
8	0810	CONCRETE A	0	0	0	0	165.00	SF	6.50	6.50	20	1980	1980	3	20	215	
9	0350	CARPORT WD	0	0	16	53	848.00	SF	13.00	13.00	100	2000	2000	3	20	2,205	
10	0100	BAR-B-Q	0	0	0	0	1.00	UT	200.00	200.00	100	1995	1995	3	20	40	

TOTAL OB/XF 32,071

LAND DESCRIPTION

LN	USE CODE	CLS	LAND USE DESCRIPTION	CAP	RD	LOC ZONE	FRONT	DEPTH	TOT LND UTS	UNIT TYPE	DT	DPTH FACT	% COND	TOT ADJ	UNIT PRICE	ADJ UNIT PRICE	LAND VALUE	OTHER ADJUSTMENTS AND NOTES	YEAR	DENSITY	DECL	FRZ	YR	CONSRV
1	000600	C	RETIREMENT	0	0004	CI			392,040.00	SF		1.00	0.50	0.50	0.75	0.38	147,015							
2	000000	C	VAC RES	0	0004	OR			5.00	AC		1.00	1.00	1.00	19,000.00	19,000.00	95,000							

REVIEW DATE 06/07/2021 BY TWA Total Acres: 14.00 Total Land Value: 242,015 Market: 0 Agricultural: 0 Common: 242,015 PRINTED 08/06/2024 BY SYS

SAMUEL CLARK & GEORGE S BROWN
GRANT IN SEC 41-4N-23E
IN OR 1726/260 & LOT 9

DAYSPRING HEALTH LLC/
PO BOX 1080
HILLIARD, FL 32046

2024

41-4N-23-0000-0002-0000

NASSAU COUNTY PROPERTY

BUILDING CHARACTERISTICS

ELEMENT	CD	CONSTRUCTION
Exterior Wall	19	COMMON BRK 100
Roof Structur	04	WOOD TRUSS 100
Roof Cover	03	COMP SHNGL 100
Interior Wall	05	DRYWALL 100
Interior Floo	11	CLAY TILE 100
Ceiling	01	FIN.SUSPD 100
Air Condition	03	CENTRAL 100
Heating Type	04	AIR DUCTED 100
Fixtures		15 100
Frame	03	MASONRY 100
Story Height		8 100
RMS		14 100
Stories	1.	1. 100
Units		0 100
BUD8 Adjustme	04	DIST 01 100
Occupancy	00	NONE 100
Quality	03	Quality Level 03
DOR CODE	0600	RETIREMENT HOMES
MAP NUM		MKT AREA 09
NEIGHBORHOOD/LOC	9002.00	

AREA TYPE	TOTAL GROSS AREA	PCT OF BASE	TOT ADJ AREA	SUBAREA MARKET VALUE
BAS	240	100	240	4,825
BAS	275	100	275	5,529
BAS	852	100	852	17,130
BAS	2,021	100	2,021	40,634
BAS	810	100	810	16,286
BAS	903	100	903	18,156
CAN	240	30	72	1,448
CAN	240	30	72	1,448
CAN	172	30	52	1,046
STP	109	10	11	221
TOTALS	6,022		5,348	107,527

MARKET ADJUSTMENTS

TYPE	MDL	EFF. AREA	TOT ADJ PTS	EFF. BASE RATE	REPL. COST NEW	AYB	EYB	ECON	FNCT		NORM	% COND
3901	04	5,348	111.0780	100.53	537,634	1950	1970	0	0	0	80.00	20.00

2 MOTEL - 0% - 0 Heated Area: 5101 HX Base Yr

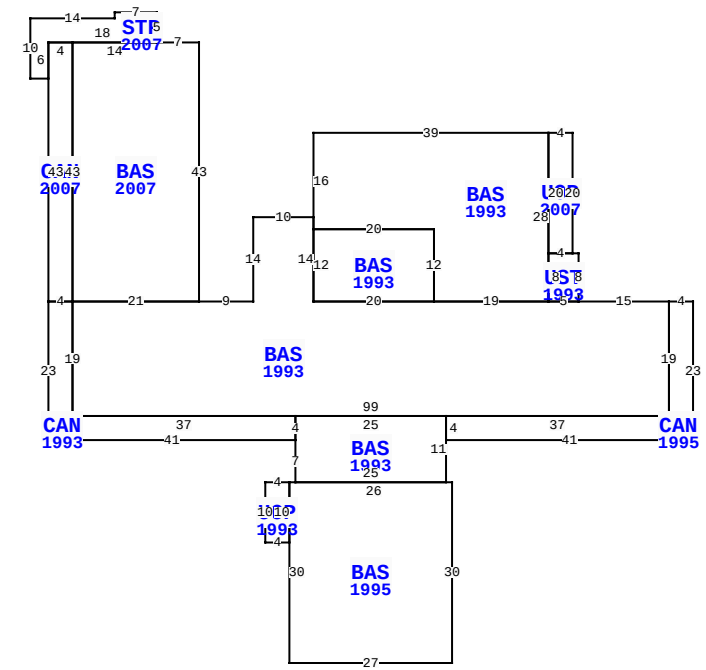

** This building has 13 Sub-Areas

554820 US HWY 1, HILLIARD

BLD DATE	05/21/2024 REA	LGL DATE	
XF DATE		LAND DATE	
INC DATE		AG DATE	

VALUATION SUMMARY

VALUATION BY	STANDARD
Tax Group: 4	Tax Dist:
BUILDING MARKET VALUE	421,343
TOTAL MARKET OB/XF VALUE	35,341
TOTAL LAND VALUE - MARKET	242,015
TOTAL MARKET VALUE	698,699
SOH/AGL Deduction	0
ASSESSED VALUE	698,699
TOTAL EXEMPTION VALUE	0
BASE TAXABLE VALUE	698,699
TOTAL JUST VALUE	698,699
NCON VALUE	0
INCOME VALUE	
PREVIOUS YEAR MKT VALUE	698,339

PERMIT NUM	DESCRIPTION	AMT	ISSUED
C23458	CO ISSUED	0	08/01/2010
B23458	ADDITION	11,241	04/01/2010
B23365	ADDITION	7,423	03/01/2010
E20858	ELEC OTHER	1,000	06/01/2008
B21398	REMODEL	5,000	05/01/2008
E20141	ELEC OTHER	1,800	10/01/2007

SALES DATA

OFF RECORD Number	DATE	TYPE INST	Q U	V I	RSN CD	SALE PRICE
1726/0260	2/18/2011	WD	U	I	11	100
GRANTOR: ADKINS JOAN D TRUSTEE						
GRANTEE: DAYSPRING HEALTH LL						
1622/0799	5/29/2009	WD	U	V		40,000
GRANTOR: DAVIS CLINTON A & ANG						
GRANTEE: DAYSPRING HEALTH LL						

BUILDING NOTES

BUILDING DIMENSIONS

CAN=[YR=1995] W4 BAS=[YR=1993] W15 UST=[YR=1993] N8W1
UOP=[YR=2007] N20W4S20 E4$W4S8E5$W5 BAS=[YR=1993] N28W39S16
E20S12E19$W19 BAS=[YR=1993] N12W20 S12E20$W20N14W10S14W9
BAS=[YR=2007] N43W7 STP=[YR=2007] N5W7S1W14S10E3N6 E18$W14
CAN=[YR=2007] W4S43E4N43$S43 E21$W21 CAN=[YR=1993] W4S23E41
BAS=[YR=1993] S7 BAS=[YR=1995] W1 UOP=[YR=1993]
W4S10E4N10$S30E27N30W26$E25N11 W25S4$N4W37N19$S19E99N19$S19
W37S4E41N23$.

EXTRA FEATURES

L N	OB/XF CODE	DESCRIPTION	BLD	CAP	L	W	UNITS	UT	Adj R	ADJ UNIT PRICE	ORIG COND	YEAR ON	YEAR ACTUAL	Q	% COND	OB/XF MKT VALUE	NOTES
11	0350	CARPORT WD	0	0	15	20	300.00	SF	13.00	13.00	100	1995	1995	3	20	780	
12	1123	CB 8"	0	0	68	5	340.00	SF	6.15	6.15	20	2000	2000	3	20	418	
13	0473	VF 3 RAIL	0	0	0	0	398.00	LF	7.50	7.50	20	2000	2000	3	20	597	
14	0418	EXHST FAN	0	0	0	0	1.00	UT	400.00	400.00	100	1990	1990	3	20	80	
15	0473	VF 3 RAIL	0	0	0	0	930.00	LF	7.50	7.50	20	2012	2012	3	20	1,395	

LAND DESCRIPTION

TOTAL OB/XF 3,270

L N	USE CODE	CLS	LAND USE DESCRIPTION	CAP	R D	LOC ZONE	FRONT	DEPTH	TOT LND UTS	UNIT TYPE	D T	DPTH FACT	% COND	TOT ADJ	UNIT PRICE	ADJ UNIT PRICE	LAND VALUE	OTHER ADJUSTMENTS AND NOTES	YEAR	DENSITY	DECL	FRZ	YR	CONSRV

REVIEW DATE 06/07/2021 BY TWA Total Acres: 14.00 Total Land Value: 242,015 Market: 0 Agricultural: 0 Common: 242,015 PRINTED 08/06/2024 BY SYS

SAMUEL CLARK & GEORGE S BROWN
GRANT IN SEC 41-4N-23E
IN OR 1726/260 & LOT 9

DAYSPRING HEALTH LLC/
PO BOX 1080
HILLIARD, FL 32046

2024

41-4N-23-0000-0002-0000

NASSAU COUNTY PROPERTY

BUILDING CHARACTERISTICS

ELEMENT	CD	CONSTRUCTION
Exterior Wall	19	COMMON BRK 100
Roof Structur		N/A 100
Roof Cover	03	COMP SHNGL 100
Interior Wall	03	PLASTER 100
Interior Floo	07	CORK/VTILE 100
Ceiling	02	F.NOT SUS 100
Air Condition	02	WINDOW 100
Heating Type	03	FORCED AIR 100
Fixtures		34 100
Frame	03	MASONRY 100
Common Wall		1 100
Story Height		9 100
RMS		12 100
Stories	1.	1. 100
Units		0 100
BUD8 Adjustme	04	DIST 01 100
Occupancy	00	NONE 100
Quality	03	Quality Level 03
DOR CODE	0600	RETIREMENT HOMES
MAP NUM		MKT AREA 09
NEIGHBORHOOD/LOC	9002.00	

AREA TYPE	TOTAL GROSS AREA	PCT OF BASE	TOT ADJ AREA	SUBAREA MARKET VALUE
BAS	2,849	100	2,849	49,179
CAN	844	30	253	4,367
FST	120	50	60	1,036
FST	161	50	80	1,381
TOTALS	3,974		3,242	55,963

MARKET ADJUSTMENTS

TYPE	MDL	EFF. AREA	TOT ADJ PTS	EFF. BASE RATE	REPL. COST NEW	AYB	EYB	ECON	FNCT		NORM	% COND
3901	04	3,242	95.3659	86.31	279,817	1950	1970	0	0	0	80.00	20.00

3 MOTEL – 0% - 0 Heated Area: 2849 HX Base Yr

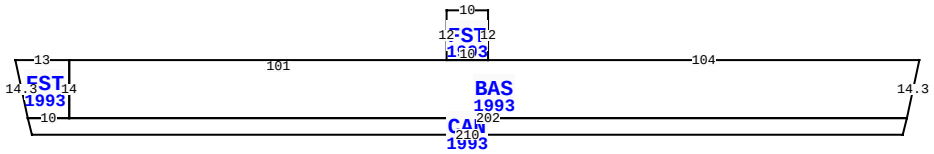

554820 US HWY 1, HILLIARD

BLD DATE	05/21/2024	REA	LGL DATE
XF DATE			LAND DATE
INC DATE			AG DATE

VALUATION SUMMARY

VALUATION BY	STANDARD
Tax Group: 4	Tax Dist:
BUILDING MARKET VALUE	421,343
TOTAL MARKET OB/XF VALUE	35,341
TOTAL LAND VALUE - MARKET	242,015
TOTAL MARKET VALUE	698,699
SOH/AGL Deduction	0
ASSESSED VALUE	698,699
TOTAL EXEMPTION VALUE	0
BASE TAXABLE VALUE	698,699
TOTAL JUST VALUE	698,699
NCON VALUE	0
INCOME VALUE	
PREVIOUS YEAR MKT VALUE	698,339

PERMIT NUM	DESCRIPTION	AMT	ISSUED
R10783	REPAIR/RRF	1,200	10/01/2007
M13403	MECH OTHER	0	10/01/2007
B20652	STORAGE	26,350	10/01/2007
C20465	CO ISSUED	0	09/01/2007
B20465	REMODEL	74,820	09/01/2007
R10679	REPAIR/RRF	5,000	09/01/2007

SALES DATA

OFF RECORD Number	DATE	TYPE INST	Q / U	V / I	RSN CD	SALE PRICE
1726/0260	2/18/2011	WD	U	I	11	100
GRANTOR: ADKINS JOAN D TRUSTEE						
GRANTEE: DAYSPRING HEALTH LL						
1622/0799	5/29/2009	WD	U	V		40,000
GRANTOR: DAVIS CLINTON A & ANG						
GRANTEE: DAYSPRING HEALTH LL						

BUILDING NOTES

BUILDING DIMENSIONS

BAS=[YR=1993] W104 FST=[YR=1993] N12 W10 S12 E10$
W101FST=[YR=1993] W13 D14 R3 E10N14$S14CAN=[YR=1993] W10 D4
R1 E210 U4 R1 W202$E202 U14 R3 $.

EXTRA FEATURES

L N	OB/XF CODE	DESCRIPTION	BLD	CAP	L	W	UNITS	UT	Adj R	ADJ UNIT PRICE	ORIG COND	YEAR ON	YEAR ACTUAL	Q	% COND	OB/XF MKT VALUE	NOTES

LAND DESCRIPTION

TOTAL OB/XF 0

L N	USE CODE	CLS	LAND USE DESCRIPTION	CAP	R D	LOC ZONE	FRONT	DEPTH	TOT LND UTS	UNIT TYPE	D T	DPTH FACT	% COND	TOT ADJ	UNIT PRICE	ADJ UNIT PRICE	LAND VALUE	OTHER ADJUSTMENTS AND NOTES	YEAR	DENSITY	DECL	FRZ	YR	CONSRV

REVIEW DATE 06/07/2021 BY TWA Total Acres: 14.00 Total Land Value: 242,015 Market: 0 Agricultural: 0 Common: 242,015 PRINTED 08/06/2024 BY SYS

SAMUEL CLARK & GEORGE S BROWN
GRANT IN SEC 41-4N-23E
IN OR 1726/260 & LOT 9

DAYSPRING HEALTH LLC/
PO BOX 1080
HILLIARD, FL 32046

2024

41-4N-23-0000-0002-0000

NASSAU COUNTY PROPERTY

BUILDING CHARACTERISTICS

ELEMENT	CD	CONSTRUCTION
Exterior Wall	19	COMMON BRK 100
Roof Structur	04	WOOD TRUSS 100
Roof Cover	03	COMP SHNGL 100
Interior Wall	03	PLASTER 100
Interior Floo	07	CORK/VTILE 100
Ceiling	02	F.NOT SUS 100
Air Condition	02	WINDOW 100
Heating Type	03	FORCED AIR 100
Fixtures		42 100
Frame	03	MASONRY 100
Common Wall		1 100
Story Height		9 100
RMS		24 100
Stories	1.	1. 100
Units		0 100
BUD8 Adjustme	04	DIST 01 100
Occupancy	00	NONE 100
Quality	03	Quality Level 03
DOR CODE	0600	RETIREMENT HOMES
MAP NUM		MKT AREA 09
NEIGHBORHOOD/LOC	9002.00	

AREA TYPE	TOTAL GROSS AREA	PCT OF BASE	TOT ADJ AREA	SUBAREA MARKET VALUE
BAS	1,036	100	1,036	17,718
BAS	3,346	100	3,346	57,223
BAS	1,308	100	1,308	22,369
CAN	1,422	30	427	7,303
FST	98	50	49	838
FST	168	50	84	1,437
FST	252	50	126	2,155
FST	308	50	154	2,634
UST	45	40	18	308
TOTALS	7,983		6,548	111,984

MARKET ADJUSTMENTS

TYPE	MDL	EFF. AREA	TOT ADJ PTS	EFF. BASE RATE	REPL. COST NEW	AYB	EYB	ECON	FNCT		NORM	% COND
3901	04	6,548	94.4880	85.51	559,919	1950	1970	0	0	0	80.00	20.00

4 MOTEL – 0% - 0 Heated Area: 5690 HX Base Yr

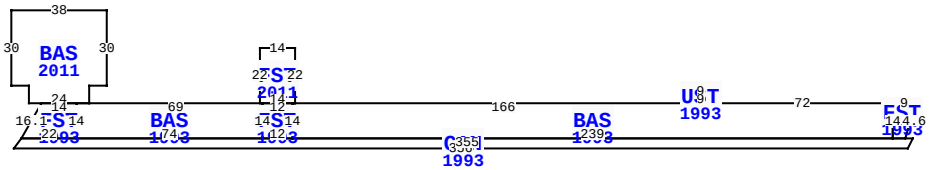

554820 US HWY 1, HILLIARD

BLD DATE	05/21/2024 REA	LGL DATE	
XF DATE		LAND DATE	
INC DATE		AG DATE	

VALUATION SUMMARY

VALUATION BY	STANDARD
Tax Group: 4	Tax Dist:
BUILDING MARKET VALUE	421,343
TOTAL MARKET OB/XF VALUE	35,341
TOTAL LAND VALUE - MARKET	242,015
TOTAL MARKET VALUE	698,699
SOH/AGL Deduction	0
ASSESSED VALUE	698,699
TOTAL EXEMPTION VALUE	0
BASE TAXABLE VALUE	698,699
TOTAL JUST VALUE	698,699
NCON VALUE	0
INCOME VALUE	
PREVIOUS YEAR MKT VALUE	698,339

PERMIT NUM	DESCRIPTION	AMT	ISSUED
B18604	ADDITION	18,000	10/01/2006
R09770	REPAIR/RRF	3,500	10/01/2006
B00	REMODEL	14,500	03/07/2000
B952058	REMODEL	12,000	07/01/1995
5139	REPAIR/RRF	2,000	09/01/1988

SALES DATA

OFF RECORD Number	DATE	TYPE INST	Q / U	V / I	RSN CD	SALE PRICE
1726/0260	2/18/2011	WD	U	I	11	100
GRANTOR: ADKINS JOAN D TRUSTEE						
GRANTEE: DAYSPRING HEALTH LL						
1622/0799	5/29/2009	WD	U	V		40,000
GRANTOR: DAVIS CLINTON A & ANG						
GRANTEE: DAYSPRING HEALTH LL						

BUILDING NOTES

BUILDING DIMENSIONS

FST=[YR=1993] W9 BAS=[YR=1993] W72 UST=[YR=1993] N5 W9 S5 E9$ W166 FST=[YR=2011] N22 W14 S22 E14$ W1 FST=[YR=1993] W12 BAS=[YR=1993] W69 BAS=[YR=2011] N7 E7 N30 W38 S30 E7 S7 E24$ W5 FST=[YR=1993] W14 D14 L8 CAN=[YR=1993] L3 D4 E356 R2 U4 W355$ E22N14$S14 E74N14$S14E12N14$ S14E239N14$ S14E5 U14 R4 $.

EXTRA FEATURES

L N	OB/XF CODE	DESCRIPTION	BLD	CAP	L	W	UNITS	UT	Adj R	ADJ UNIT PRICE	ORIG COND	YEAR ON	YEAR ACTUAL	Q	% COND	OB/XF MKT VALUE	NOTES

LAND DESCRIPTION

TOTAL OB/XF 0

L N	USE CODE	CLS	LAND USE DESCRIPTION	CAP	R D	LOC ZONE	FRONT	DEPTH	TOT LND UTS	UNIT TYPE	D T	DPTH FACT	% COND	TOT ADJ	UNIT PRICE	ADJ UNIT PRICE	LAND VALUE	OTHER ADJUSTMENTS AND NOTES	YEAR	DENSITY	DECL	FRZ	YR	CONSRV

REVIEW DATE 06/07/2021 BY TWA Total Acres: 14.00 Total Land Value: 242,015 Market: 0 Agricultural: 0 Common: 242,015 PRINTED 08/06/2024 BY SYS

SAMUEL CLARK & GEORGE S BROWN
GRANT IN SEC 41-4N-23E
IN OR 1726/260 & LOT 9

DAYSPRING HEALTH LLC/
PO BOX 1080
HILLIARD, FL 32046

2024

41-4N-23-0000-0002-0000

NASSAU COUNTY PROPERTY

BUILDING CHARACTERISTICS

ELEMENT	CD	CONSTRUCTION
Exterior Wall	15	CONC BLOCK 50
Exterior Wall	19	COMMON BRK 50
Roof Structur	04	WOOD TRUSS 100
Roof Cover	03	COMP SHNGL 100
Interior Wall	05	DRYWALL 100
Interior Floo	14	CARPET 100
Ceiling	02	F.NOT SUS 100
Air Condition	01	NONE 100
Heating Type	03	FORCED AIR 100
Plumbing		62 100
Frame	03	MASONRY 100
Common Wall		1 100
Story Height		9 100
RMS		22 100
Stories	1.	1. 100
Class	00	. 100
Units		0 100
BUD8 Adjustme	04	DIST 01 100
Quality	00	QUALITY Level 02
Occupancy	00	100
DOR CODE	0600	RETIREMENT HOMES
MAP NUM		MKT AREA 09
NEIGHBORHOOD/LOC	9002.00	

AREA TYPE	TOTAL GROSS AREA	PCT OF BASE	TOT ADJ AREA	SUBAREA MARKET VALUE
BAS	54	100	54	370
BAS	130	100	130	891
BAS	5,208	100	5,208	35,696
CAN	1,504	30	451	3,091
TOTALS	6,896		5,843	40,048

MARKET ADJUSTMENTS

TYPE	MDL	EFF. AREA	TOT ADJ PTS	EFF. BASE RATE	REPL. COST NEW	AYB	EYB	ECON	FNCT	AP	NORM	% COND
4804	06	5,843	86.7510	34.27	200,240	1950	1970	0	0	30	50.00	20.00

5 MINI WAREH – 0% - 0 Heated Area: 5392 HX Base Yr

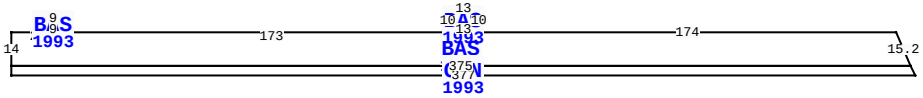

554820 US HWY 1, HILLIARD

BLD DATE	05/21/2024	REA	LGL DATE
XF DATE			LAND DATE
INC DATE			AG DATE

VALUATION SUMMARY

VALUATION BY	STANDARD
Tax Group: 4	Tax Dist:
BUILDING MARKET VALUE	421,343
TOTAL MARKET OB/XF VALUE	35,341
TOTAL LAND VALUE - MARKET	242,015
TOTAL MARKET VALUE	698,699
SOH/AGL Deduction	0
ASSESSED VALUE	698,699
TOTAL EXEMPTION VALUE	0
BASE TAXABLE VALUE	698,699
TOTAL JUST VALUE	698,699
NCON VALUE	0
INCOME VALUE	
PREVIOUS YEAR MKT VALUE	698,339

PERMIT NUM	DESCRIPTION	AMT	ISSUED

SALES DATA

OFF RECORD Number	DATE	TYPE INST	Q / U	V / I	RSN CD	SALE PRICE
1726/0260	2/18/2011	WD	U	I	11	100
GRANTOR: ADKINS JOAN D TRUSTEE						
GRANTEE: DAYSPRING HEALTH LL						
1622/0799	5/29/2009	WD	U	V		40,000
GRANTOR: DAVIS CLINTON A & ANG						
GRANTEE: DAYSPRING HEALTH LL						

BUILDING NOTES

BUILDING DIMENSIONS

BAS=[YR=1993] W174 BAS=[YR=1993] N10 W13 S10E13$W173
BAS=[YR=1993] N6 W9S6 E9 $ W22 S14 CAN=[YR=1993] S4 E377 U4
L2 W375$E375 U14 L6 $.

EXTRA FEATURES

LN	OB/XF CODE	DESCRIPTION	BLD	CAP	L	W	UNITS	UT	Adj R	ADJ UNIT PRICE	ORIG COND	YEAR ON	YEAR ACTUAL	Q	% COND	OB/XF MKT VALUE	NOTES

LAND DESCRIPTION

TOTAL OB/XF 0

LN	USE CODE	CLS	LAND USE DESCRIPTION	CAP	RD	LOC ZONE	FRONT	DEPTH	TOT LND UTS	UNIT TYPE	DT	DPTH FACT	% COND	TOT ADJ	UNIT PRICE	ADJ UNIT PRICE	LAND VALUE	OTHER ADJUSTMENTS AND NOTES	YEAR	DENSITY	DECL	FRZ	YR	CONSRV

REVIEW DATE 06/07/2021 BY TWA Total Acres: 14.00 Total Land Value: 242,015 Market: 0 Agricultural: 0 Common: 242,015 PRINTED 08/06/2024 BY SYS

SAMUEL CLARK & GEORGE S BROWN
GRANT IN SEC 41-4N-23E
IN OR 1726/260 & LOT 9

DAYSPRING HEALTH LLC/
PO BOX 1080
HILLIARD, FL 32046

2024

41-4N-23-0000-0002-0000

BUILDING CHARACTERISTICS

ELEMENT	CD	CONSTRUCTION
Exterior Wall	20	FACE BRICK 80
Exterior Wall	15	CONC BLOCK 20
Roof Structur	04	WOOD TRUSS 100
Roof Cover	03	COMP SHNGL 100
Interior Wall	01	MINIMUM 100
Interior Floo	03	CONC FINSH 100
Ceiling	04	NONE 100
Air Condition	01	NONE 100
Heating Type	01	NONE 100
Fixtures		0 100
Frame	03	MASONRY 100
Story Height		10 100
RMS		0 100
Stories	1.	1. 100
Units		0 100
Occupancy	00	NONE 100
Quality	03	Quality Level 03
DOR CODE	0600	RETIREMENT HOMES
MAP NUM		MKT AREA 09
NEIGHBORHOOD/LOC	9002.00	

AREA TYPE	TOTAL GROSS AREA	PCT OF BASE	TOT ADJ AREA	SUBAREA MARKET VALUE
BAS	701	100	701	15,859
FCP	260	30	78	1,765
TOTALS	961		779	17,624

MARKET ADJUSTMENTS

TYPE	MDL	EFF. AREA	TOT ADJ PTS	EFF. BASE RATE	REPL. COST NEW	AYB	EYB	ECON	FNCT		NORM	% COND
2703	04	779	59.8500	28.28	22,030	2008	2008	0	0	0	20.00	80.00

6 GARAGE – 0% - 0 Heated Area: 701 HX Base Yr

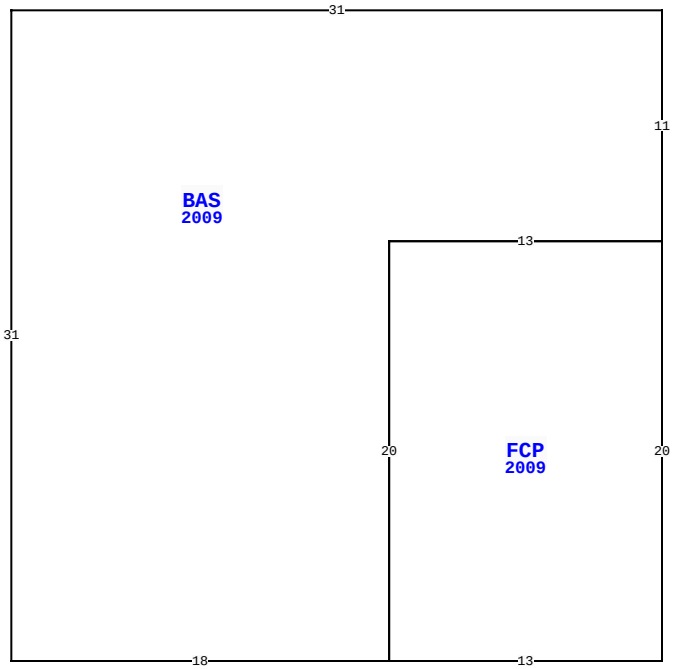

554820 US HWY 1, HILLIARD

BLD DATE	05/21/2024 REA	LGL DATE	
XF DATE		LAND DATE	
INC DATE		AG DATE	

NASSAU COUNTY PROPERTY

PAGE 6 of 6 4

VALUATION SUMMARY

VALUATION BY	STANDARD
Tax Group: 4	Tax Dist:
BUILDING MARKET VALUE	421,343
TOTAL MARKET OB/XF VALUE	35,341
TOTAL LAND VALUE - MARKET	242,015
TOTAL MARKET VALUE	698,699
SOH/AGL Deduction	0
ASSESSED VALUE	698,699
TOTAL EXEMPTION VALUE	0
BASE TAXABLE VALUE	698,699
TOTAL JUST VALUE	698,699
NCON VALUE	0
INCOME VALUE	
PREVIOUS YEAR MKT VALUE	698,339

PERMIT NUM	DESCRIPTION	AMT	ISSUED

SALES DATA

OFF RECORD Number	DATE	TYPE INST	Q / U	V / I	RSN CD	SALE PRICE
1726/0260	2/18/2011	WD	U	I	11	100
GRANTOR: ADKINS JOAN D TRUSTEE						
GRANTEE: DAYSPRING HEALTH LL						
1622/0799	5/29/2009	WD	U	V		40,000
GRANTOR: DAVIS CLINTON A & ANG						
GRANTEE: DAYSPRING HEALTH LL						

BUILDING NOTES

BUILDING DIMENSIONS

BAS=[YR=2009] W31 S31 E18 FCP=[YR=2009] E13 N20 W13 S20 $
N20 E13 N11$.

EXTRA FEATURES

LN	OB/XF CODE	DESCRIPTION	BLD	CAP	L	W	UNITS	UT	Adj R	ADJ UNIT PRICE	ORIG COND	YEAR ON	YEAR ACTUAL	Q	% COND	OB/XF MKT VALUE	NOTES

LAND DESCRIPTION

TOTAL OB/XF 0

LN	USE CODE	CLS	LAND USE DESCRIPTION	CAP	RD	LOC ZONE	FRONT	DEPTH	TOT LND UTS	UNIT TYPE	DT	DPTH FACT	% COND	TOT ADJ	UNIT PRICE	ADJ UNIT PRICE	LAND VALUE	OTHER ADJUSTMENTS AND NOTES	YEAR	DENSITY	DECL	FRZ	YR	CONSRV

REVIEW DATE 06/07/2021 BY TWA Total Acres: 14.00 Total Land Value: 242,015 Market: 0 Agricultural: 0 Common: 242,015 PRINTED 08/06/2024 BY SYS