LOT 141
LIGHTHOUSE POINTE #2 PB 7/145

EQUERME ROGER P & MIGNON K
28698 VIEUX CARRE
YULEE, FL 32097

2024

41-3N-28-1250-0141-0000

NASSAU COUNTY PROPERTY

BUILDING CHARACTERISTICS

ELEMENT	CD	CONSTRUCTION
Exterior Wall	31	HARDIE BRD 100
Roof Structur	08	IRREGULAR 100
Roof Cover	14	STAND SEAM 100
Interior Wall	05	DRYWALL 100
Interior Floo	12	HARDWOOD 90
Interior Floo	11	CLAY TILE 10
Air Condition	03	CENTRAL 100
Heating Type	04	AIR DUCTED 100
Bedrooms		3 100
Bathrooms		2.5 100
Frame	02	WOOD FRAME 100
Stories	2.	2. 100
Quality	05	Quality Level 05

DOR CODE	0100	SINGLE FAMILY	
MAP NUM		MKT AREA	04
NEIGHBORHOOD/LOC	4034.00		

AREA TYPE	TOTAL GROSS AREA	PCT OF BASE	TOT ADJ AREA	SUBAREA MARKET VALUE
BAS	2,119	100	2,119	348,660
FGR	1,061	55	584	96,091
FOP	774	30	232	38,173
FSP	214	40	86	14,150
FUS	792	100	792	130,316
STR	68	10	7	1,152
UST	72	45	32	5,265
TOTALS	5,100		3,852	633,808

MARKET ADJUSTMENTS

TYPE	MDL	EFF. AREA	TOT ADJ PTS	EFF. BASE RATE	REPL. COST NEW	AYB	EYB	ECON	FNCT		NORM	% COND
0500	01	3,852	109.6920	164.54	633,808	2023	2023	0	0	0	0.00	100.00

1 SFR CUST – 100% - 2024 Heated Area: 2911 HX Base Yr 2024

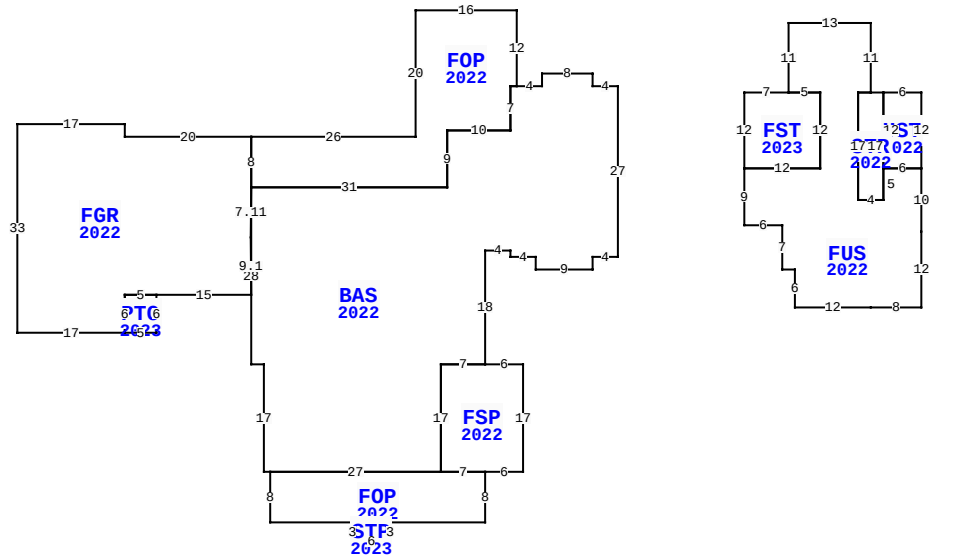

28698 VIEUX CARRE, YULEE

BLD DATE		LGL DATE	
XF DATE		LAND DATE	04/15/2024 MLU
INC DATE		AG DATE	

NASSAU COUNTY PROPERTY — VALUATION SUMMARY

VALUATION BY		STANDARD
Tax Group: 4	Tax Dist:	
BUILDING MARKET VALUE		633,808
TOTAL MARKET OB/XF VALUE		31,466
TOTAL LAND VALUE - MARKET		100,000
TOTAL MARKET VALUE		765,274
SOH/AGL Deduction		46,759
ASSESSED VALUE		718,515
TOTAL EXEMPTION VALUE	HX HB	50,000
BASE TAXABLE VALUE		668,515
TOTAL JUST VALUE		765,274
NCON VALUE		665,274
INCOME VALUE		
PREVIOUS YEAR MKT VALUE		110,000

PERMIT NUM	DESCRIPTION	AMT	ISSUED
CO230009196	CO		07/19/2023
21017069	NEW CONSTR	594,917	12/09/2021

SALES DATA

OFF RECORD Number	DATE	TYPE INST	Q / U	V / I	RSN CD	SALE PRICE
2465/1466	5/06/2021	WD	Q	V	02	130,000
GRANTOR: ASHTON DUB & SANDRA K						
GRANTEE: EQUERME ROGER P & M						
2083/1653	11/15/2016	WD	Q	I	01	120,000
GRANTOR: LIGHTHOUSE POINTE DEV						
GRANTEE: ASHTON DUB & SANDRA						

BUILDING NOTES

EXTRA FEATURES

LN	OB/XF CODE	DESCRIPTION	BLD	CAP	L	W	UNITS	UT	Adj R	ADJ UNIT PRICE	ORIG COND	YEAR ON	YEAR ACTUAL	Q	% COND	OB/XF MKT VALUE	NOTES
1	0501	FP-AVERAGE	0	100	0	0	1.00	UT	5,000.00	5,000.00	100	2024	2023		100	5,000	
2	0855	CONC PAVER	0	100	0	0	957.00	SF	10.00	10.00	100	2024	2023		100	9,570	
3	0810	CONCRETE A	0	100	0	0	24.00	SF	6.50	6.50	100	2024	2023		100	156	
4	0479	VF PICKET	0	100	0	0	114.00	LF	10.00	10.00	100	2024	2023		100	1,140	
5	0470	VNYL GATE	0	100	0	0	2.00	UT	300.00	300.00	100	2024	2023		100	600	
6	0600	SUMMER KIT	0	100	0	0	1.00	UT	5,000.00	5,000.00	100	2024	2023		100	5,000	
7	0502	FP-CUSTOM	0	100	0	0	1.00	UT	10,000.00	10,000.00	100	2024	2023		100	10,000	

BUILDING DIMENSIONS

BAS=[YR=2022;ORIG=0,-1] W4 N2 W8 S2 W4 W1 S7 W10 S9 W31 S28 E2 S17 E1 E27 N17 E7 N18 E4 S1 E4 S2 E9 N2 E4 N27 $
FGR=[YR=2022;ORIG=-58,15] N8 W20 N2 W17 S33 E17 N6 E5 E15 U9.1L0.1 U7.11R0.1 $
FUS=[YR=2022;ORIG=20,12] E12 N12 W5 N11 E13 S11 W2 S17 E4 N5 E6 S10 S12 W8 W12 N6 W2 N7 W6 N9 $
FOP=[YR=2022;ORIG=-16,-1] N12 W16 S20 W26 S8 E31 N9 E10 N7 E1 $
FOP=[YR=2022;ORIG=-55,60] S8 E34 N8 W7 W27 $
FSP=[YR=2022;ORIG=-21,60] E6 N17 W6 W7 S17 E7 $
UST=[YR=2022;ORIG=42,0] E6 S12 W6 N12 $
STR=[YR=2022;ORIG=40,0] E2 S17 W4 N17 E2 $

LAND DESCRIPTION

TOTAL OB/XF 31,466

LN	USE CODE	CLS	LAND USE DESCRIPTION	CAP	RD	LOC ZONE	FRONT	DEPTH	TOT LND UTS	UNIT TYPE	DT	DPTH FACT	% COND	TOT ADJ	UNIT PRICE	ADJ UNIT PRICE	LAND VALUE	OTHER ADJUSTMENTS AND NOTES	YEAR	DENSITY	DECL	FRZ	YR	CONSRV
1	000134	C	SFR POND	100		PUD	0.00	0.00	1.00	LT		1.00	1.00	1.00	100,000.00	100,000.00	100,000							

REVIEW DATE 07/10/2023 BY DJ Total Acres: 0.00 Total Land Value: 100,000 Market: 0 Agricultural: 0 Common: 100,000 PRINTED 08/06/2024 BY SYS