LOT 108
LIGHTHOUSE POINTE #2 PB 7/145

STOUSE JACQUELINE M
29179 GRANDVIEW MANOR
YULEE, FL 32097

2024

41-3N-28-1250-0108-0000

BUILDING CHARACTERISTICS

ELEMENT	CD	CONSTRUCTION
Exterior Wall	10	ABOVE AVG 100
Roof Structur	03	GABLE/HIP 100
Roof Cover	03	COMP SHNGL 100
Interior Wall	05	DRYWALL 100
Interior Floo	11	CLAY TILE 60
Interior Floo	14	CARPET 40
Air Condition	03	CENTRAL 100
Heating Type	04	AIR DUCTED 100
Bedrooms		3 100
Bathrooms		3 100
Frame	02	WOOD FRAME 100
Stories	1.	1. 100
Units		0 100
Occupancy	00	NONE 100
Quality	05	Quality Level 05

DOR CODE 0100 SINGLE FAMILY
MAP NUM | MKT AREA 04
NEIGHBORHOOD/LOC 4034.00

AREA TYPE	TOTAL GROSS AREA	PCT OF BASE	TOT ADJ AREA	SUBAREA MARKET VALUE
BAS	2,580	100	2,580	448,285
FGR	506	55	278	48,303
FOP	130	30	39	6,777
FOP	136	30	41	7,124
FOP	220	30	66	11,468
PTO	102	5	5	869
TOTALS	3,674		3,009	522,826

MARKET ADJUSTMENTS

TYPE	MDL	EFF. AREA	TOT ADJ PTS	EFF. BASE RATE	REPL. COST NEW	AYB	EYB	ECON	FNCT		NORM	% COND
0500	01	3,009	118.2016	177.30	533,496	2018	2018	0	0	0	2.00	98.00

1 SFR CUST – 0% - 0 Heated Area: 2580 HX Base Yr

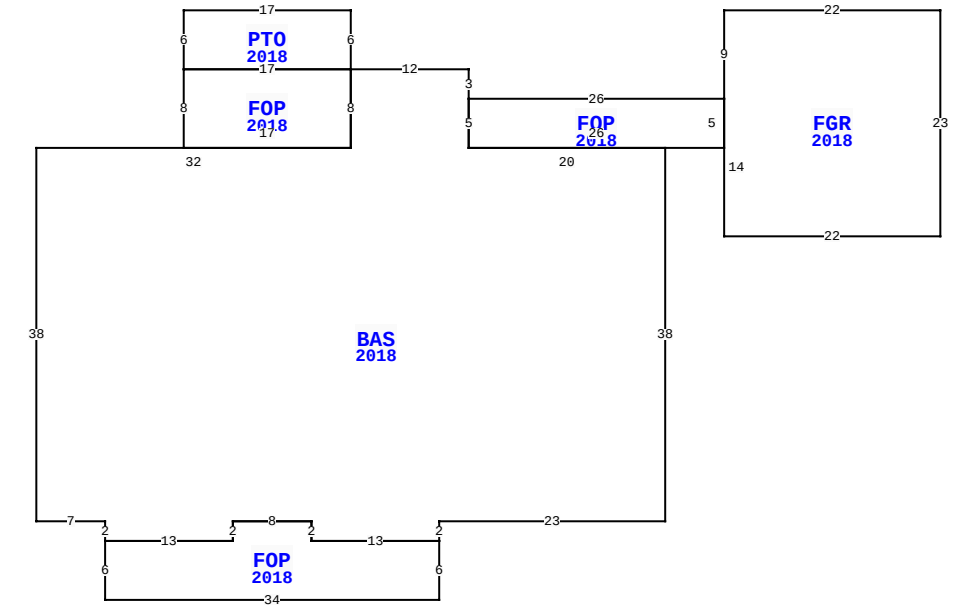

29179 GRANDVIEW MNR, YULEE

BLD DATE		LGL DATE	
XF DATE		LAND DATE	04/15/2024 MLU
INC DATE		AG DATE	

NASSAU COUNTY PROPERTY

PAGE 1 of 1 4

VALUATION SUMMARY

VALUATION BY	STANDARD
Tax Group: 4	Tax Dist:
BUILDING MARKET VALUE	522,826
TOTAL MARKET OB/XF VALUE	11,620
TOTAL LAND VALUE - MARKET	100,000
TOTAL MARKET VALUE	634,446
SOH/AGL Deduction	145,449
ASSESSED VALUE	488,997
TOTAL EXEMPTION VALUE	0
BASE TAXABLE VALUE	488,997
TOTAL JUST VALUE	634,446
NCON VALUE	0
INCOME VALUE	
PREVIOUS YEAR MKT VALUE	620,963

PERMIT NUM	DESCRIPTION	AMT	ISSUED
B1709403	CO ISSUED	0	10/25/2018
B1709403	NEW CONSTR	334,712	10/24/2017

SALES DATA

OFF RECORD Number	DATE	TYPE INST	Q U	V I	RSN CD	SALE PRICE
2703/777	3/27/2024	FJ	U	I	11	0
GRANTOR: STOUSE KEVIN F						
GRANTEE: STOUSE JACQUELINE M						
2298/1558	8/16/2019	WD	Q	I	01	479,900
GRANTOR: WHITE WILLIAM HOWARD						
GRANTEE: STOUSE KEVIN F & JA						

BUILDING NOTES

BUILDING DIMENSIONS

FGR=[YR=2018] W22 S9 FOP=[YR=2018] W26 BAS=[YR=2018] N3 W12 PTO=[YR=2018] N6 W17 S6 E17$ FOP=[YR=2018] W17 S8 E17 N8$ S8 W32 S38 E7 S2 FOP=[YR=2018] S6 E34 N6 W13 N2 W8 S2 W13$ E13 N2 E8 S2 E13 N2 E23 N38 W20 N5$ S5 E26 N5$ S14 E22 N23$.

EXTRA FEATURES

LN	OB/XF CODE	DESCRIPTION	BLD	CAP	L	W	UNITS	UT	Adj R	ADJ UNIT PRICE	ORIG COND	YEAR ON	YEAR ACTUAL	Q	% COND	OB/XF MKT VALUE	NOTES
1	0500	FP-PRE FAB	0	0	0	0	1.00	UT	3,500.00	3,500.00	100	2018	2018	3	98	3,430	
2	0855	CONC PAVER	0	0	17	3	51.00	SF	10.00	10.00	100	2018	2018	3	97	495	
3	0855	CONC PAVER	0	0	0	0	655.00	SF	10.00	10.00	100	2018	2018	3	97	6,354	
4	1127	BRICK 8"	0	0	4	0	80.00	SF	11.00	11.00	100	2018	2018	3	99	871	
5	0479	VF PICKET	0	0	0	0	50.00	LF	10.00	10.00	100	2018	2018	3	94	470	

LAND DESCRIPTION

TOTAL OB/XF 11,620

LN	USE CODE	CLS	LAND USE DESCRIPTION	CAP	RD	LOC ZONE	FRONT	DEPTH	TOT LND UTS	UNIT TYPE	DT	DPTH FACT	% COND	TOT ADJ	UNIT PRICE	ADJ UNIT PRICE	LAND VALUE	OTHER ADJUSTMENTS AND NOTES	YEAR	DENSITY	DECL	FRZ	YR	CONSRV
1	000136	C	SFR INT	0		PUD	0.00	0.00	1.00	LT		1.00	1.00	1.00	100,000.00	100,000.00	100,000							

REVIEW DATE 01/08/2019 BY KW Total Acres: 0.00 Total Land Value: 100,000 Market: 0 Agricultural: 0 Common: 100,000 PRINTED 08/06/2024 BY SYS