LOT 80
LIGHTHOUSE POINTE #2 PB 7/145

DANIELSON WARREN K & LAVONNE L
29318 GRANDVIEW MANOR
YULEE, FL 32097

2024

41-3N-28-1250-0080-0000

NASSAU COUNTY PROPERTY

BUILDING CHARACTERISTICS

ELEMENT	CD	CONSTRUCTION
Exterior Wall	31	HARDIE BRD 100
Roof Structur	08	IRREGULAR 100
Roof Cover	03	COMP SHNGL 100
Interior Wall	05	DRYWALL 100
Interior Floo	13	LVT/LAMNT 70
Interior Floo	14	CARPET 30
Air Condition	03	CENTRAL 100
Heating Type	04	AIR DUCTED 100
Bedrooms		3 100
Bathrooms		2.5 100
Frame	02	WOOD FRAME 100
Stories	1.	1. 100
Units		0 100
Quality	05	Quality Level 05
DOR CODE	0100	SINGLE FAMILY
MAP NUM		MKT AREA 04
NEIGHBORHOOD/LOC	4034.00	

AREA TYPE	TOTAL GROSS AREA	PCT OF BASE	TOT ADJ AREA	SUBAREA MARKET VALUE
BAS	1,835	100	1,835	317,051
FGR	576	55	317	54,771
FOP	216	30	65	11,231
FOP	470	30	141	24,362
FUS	583	100	583	100,731
STR	44	10	4	691
TOTALS	3,724		2,945	508,837

MARKET ADJUSTMENTS

TYPE	MDL	EFF. AREA	TOT ADJ PTS	EFF. BASE RATE	REPL. COST NEW	AYB	EYB	ECON	FNCT		NORM	% COND
0500	01	2,945	115.1876	172.78	508,837	2023	2023	0	0	0	0.00	100.00

1 SFR CUST – 0% - 2024 Heated Area: 2418 HX Base Yr

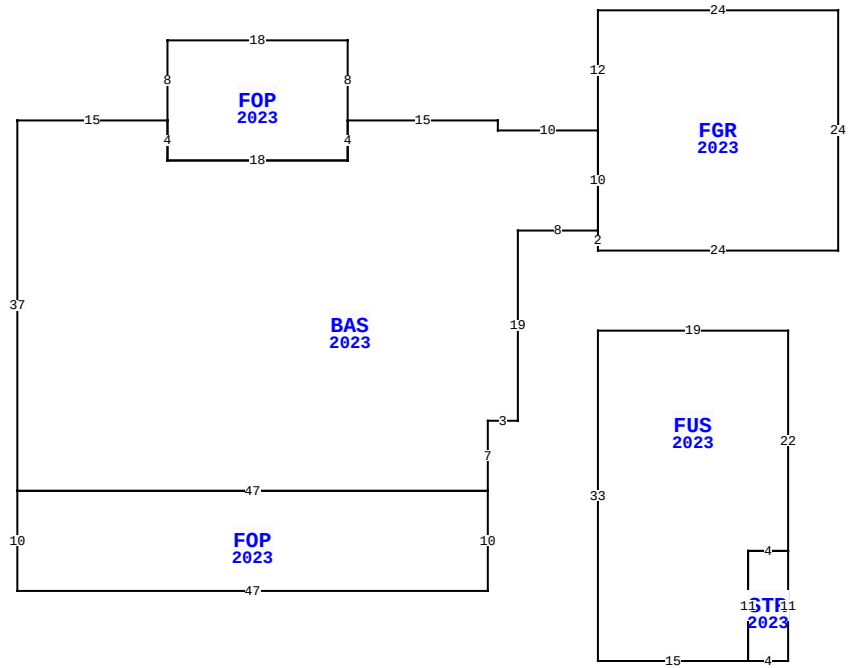

29318 GRANDVIEW MNR, YULEE

BLD DATE		LGL DATE	
XF DATE		LAND DATE	04/15/2024 MLU
INC DATE		AG DATE	

NASSAU COUNTY PROPERTY — VALUATION SUMMARY

VALUATION BY	STANDARD
Tax Group: 4	Tax Dist:
BUILDING MARKET VALUE	508,837
TOTAL MARKET OB/XF VALUE	18,844
TOTAL LAND VALUE - MARKET	100,000
TOTAL MARKET VALUE	627,681
SOH/AGL Deduction	0
ASSESSED VALUE	627,681
TOTAL EXEMPTION VALUE	0
BASE TAXABLE VALUE	627,681
TOTAL JUST VALUE	627,681
NCON VALUE	527,681
INCOME VALUE	
PREVIOUS YEAR MKT VALUE	110,000

PERMIT NUM	DESCRIPTION	AMT	ISSUED
CO230005633			05/01/2023
22002389	NEW CONSTR	409,115	02/11/2022

SALES DATA

OFF RECORD Number	DATE	TYPE INST	Q U	V I	RSN CD	SALE PRICE
2490/1600	8/25/2021	WD	Q	V	01	115,000
GRANTOR: LIGHTHOUSE POINTE DEV						
GRANTEE: DANIELSON WARREN K						
2390/1238	9/08/2020	WD	Q	V	01	66,500
GRANTOR: RC STERLING GROUP LLC						
GRANTEE: LIGHTHOUSE POINTE D						

BUILDING NOTES

BUILDING DIMENSIONS

BAS=[YR=2023;ORIG=60,10] W10 N1 W15 S4 W18 N4 W15 S37 E47 N7 E3 N19 E8 N10 $
FOP=[YR=2023;ORIG=17,1] E18 S8 S4 W18 N4 N8 $
FOP=[YR=2023;ORIG=2,46] E47 S10 W47 N10 $
FGR=[YR=2023;ORIG=60,-2] E24 S24 W24 N2 N10 N12 $
FUS=[YR=2023;ORIG=60,30] E19 S22 W4 S11 W15 N33 $
STR=[YR=2023;ORIG=75,52] E4 S11 W4 N11 $
.

EXTRA FEATURES

LN	OB/XF CODE	DESCRIPTION	BLD	CAP	L	W	UNITS	UT	Adj R	ADJ UNIT PRICE	ORIG COND	YEAR ON	YEAR ACTUAL	Q	% COND	OB/XF MKT VALUE	NOTES
1	0500	FP-PRE FAB	0	0	0	0	1.00	UT	3,500.00	3,500.00	100	2023	2023		100	3,500	
2	0855	CONC PAVER	0	0	0	0	1,366.00	SF	10.00	10.00	100	2023	2023		100	13,660	
3	0855	CONC PAVER	0	0	0	0	158.00	SF	10.00	10.00	100	2023	2023		100	1,580	
4	0810	CONCRETE A	0	0	4	4	16.00	SF	6.50	6.50	100	2023	2023		100	104	

LAND DESCRIPTION

TOTAL OB/XF 18,844

LN	USE CODE	CLS	LAND USE DESCRIPTION	CAP	RD	LOC ZONE	FRONT	DEPTH	TOT LND UTS	UNIT TYPE	DT	DPTH FACT	% COND	TOT ADJ	UNIT PRICE	ADJ UNIT PRICE	LAND VALUE	OTHER ADJUSTMENTS AND NOTES	YEAR	DENSITY	DECL	FRZ	YR	CONSRV
1	000136	C	SFR INT	0		PUD	0.00	0.00	1.00	LT		1.00	1.00	1.00	100,000.00	100,000.00	100,000							

REVIEW DATE 06/15/2023 BY MLU Total Acres: 0.00 Total Land Value: 100,000 Market: 0 Agricultural: 0 Common: 100,000 PRINTED 08/06/2024 BY SYS