LOT 23
LIGHTHOUSE POINTE PB 6/157

CROCKETT THOMAS D & JANE A
28856 GRANDVIEW MNR
YULEE, FL 32097

2024

41-3N-28-1250-0023-0000

NASSAU COUNTY PROPERTY

BUILDING CHARACTERISTICS

ELEMENT	CD	CONSTRUCTION
Exterior Wall	31	HARDIE BRD 100
Roof Structur	08	IRREGULAR 100
Roof Cover	03	COMP SHNGL 100
Interior Wall	05	DRYWALL 100
Interior Floo	12	HARDWOOD 50
Interior Floo	14	CARPET 50
Air Condition	03	CENTRAL 100
Heating Type	04	AIR DUCTED 100
Bedrooms		3 100
Bathrooms		3.5 100
Frame	02	WOOD FRAME 100
Stories	2.	2. 100
Units		0 100
Quality	05	Quality Level 05
DOR CODE	0100	SINGLE FAMILY
MAP NUM		MKT AREA 04
NEIGHBORHOOD/LOC	4034.00	

AREA TYPE	TOTAL GROSS AREA	PCT OF BASE	TOT ADJ AREA	SUBAREA MARKET VALUE
BAS	2,110	100	2,110	352,497
FGR	668	55	367	61,311
FOP	97	30	29	4,845
FOP	276	30	83	13,866
FST	40	55	22	3,675
FUS	253	100	253	42,266
FUS	910	100	910	152,025
PTO	140	5	7	1,169
STR	44	10	4	668
TOTALS	4,538		3,785	632,322

MARKET ADJUSTMENTS

TYPE	MDL	EFF. AREA	TOT ADJ PTS	EFF. BASE RATE	REPL. COST NEW	AYB	EYB	ECON	FNCT		NORM	% COND
0500	01	3,785	111.3750	167.06	632,322	2023	2023	0	0	0	0.00	100.00

1 SFR CUST – 100% - 2024 Heated Area: 3273 HX Base Yr 2024

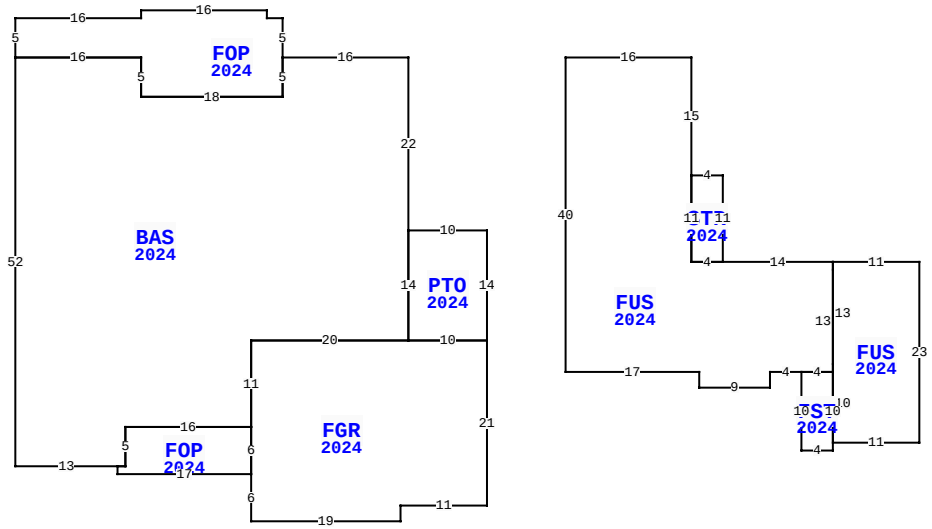

28856 GRANDVIEW MNR, YULEE

BLD DATE		LGL DATE	
XF DATE		LAND DATE	
INC DATE		AG DATE	

VALUATION SUMMARY

VALUATION BY		STANDARD
Tax Group: 4	Tax Dist:	
BUILDING MARKET VALUE		632,322
TOTAL MARKET OB/XF VALUE		79,000
TOTAL LAND VALUE - MARKET		180,000
TOTAL MARKET VALUE		891,322
SOH/AGL Deduction		234,907
ASSESSED VALUE		656,415
TOTAL EXEMPTION VALUE	HX HB	50,000
BASE TAXABLE VALUE		606,415
TOTAL JUST VALUE		891,322
NCON VALUE		711,322
INCOME VALUE		
PREVIOUS YEAR MKT VALUE		180,000

PERMIT NUM	DESCRIPTION	AMT	ISSUED
23003061	ADDITION	11,280	03/04/2023
22011872	NEW CONSTR	521,515	08/03/2022
22009915	SWIM POOL	100,000	06/28/2022

SALES DATA

OFF RECORD Number	DATE	TYPE INST	Q / U	V / I	RSN CD	SALE PRICE
2398/0581	9/28/2020	WD	U	V	37	150,000
GRANTOR: WILLIS PROPERTIES LLL						
GRANTEE: CROCKETT THOMAS D &						
2025/0044	1/22/2016	MS	U	V	11	100
GRANTOR: LIGHTHOUSE POINTE PB						
GRANTEE: WILLIS PROPERTIES L						

BUILDING NOTES

BUILDING DIMENSIONS

BAS=[YR=2024;ORIG=90,20] W16 S5 W18 N5 W16 S52 E13 E1 N5 E16 N11 E20 N14 N22 $
FUS=[YR=2024;ORIG=110,20] S40 E17 S2 E9 N2 E4 E4 N13 N1 W14 W4 N11 N15 W16 $
FGR=[YR=2024;ORIG=70,56] E20 E10 S21 W11 S2 W19 N6 N6 N11 $
FOP=[YR=2024;ORIG=72,14] W16 S1 W16 S5 E16 S5 E18 N5 N5 W2 N1 $
FUS=[YR=2024;ORIG=144,46] E11 S23 W11 N10 N13 $
PTO=[YR=2024;ORIG=90,42] E10 S14 W10 N14 $
FOP=[YR=2024;ORIG=54,67] E16 S6 W17 N1 E1 N5 $
STR=[YR=2024;ORIG=126,35] E4 S11 W4 N11 $
FST=[YR=2024;ORIG=140,60] S10 E4 N10 W4 $

EXTRA FEATURES

LN	OB/XF CODE	DESCRIPTION	BLD	CAP	L	W	UNITS	UT	Adj R	ADJ UNIT PRICE	ORIG COND	YEAR ON	YEAR ACTUAL	Q	% COND	OB/XF MKT VALUE	NOTES
1	0855	CONC PAVER	1	100	0	0	930.00	SF	10.00	10.00	100	2024	2023		100	9,300	
2	0462	ST/AL FNC	1	100	0	0	336.00	SF	10.00	10.00	100	2024	2023		100	3,360	
3	0912	SCRN RM G	1	100	0	0	858.00	SF	20.00	20.00	100	2024	2023		100	17,160	
4	0861	POOL GUNIT	1	100	0	0	408.00	SF	85.00	85.00	100	2024	2023		100	34,680	
5	0855	CONC PAVER	1	100	0	0	450.00	SF	10.00	10.00	100	2024	2023		100	4,500	
6	0501	FP-AVERAGE	1	100	0	0	2.00	UT	5,000.00	5,000.00	100	2024	2023		100	10,000	

LAND DESCRIPTION

TOTAL OB/XF 79,000

LN	USE CODE	CLS	LAND USE DESCRIPTION	CAP	RD	LOC ZONE	FRONT	DEPTH	TOT LND UTS	UNIT TYPE	DT	DPTH FACT	% COND	TOT ADJ	UNIT PRICE	ADJ UNIT PRICE	LAND VALUE	OTHER ADJUSTMENTS AND NOTES	YEAR	DENSITY	DECL	FRZ	YR	CONSRV
1	000116	C	SFR MARSH	100		PUD	0.00	0.00	1.00	LT		1.00	1.00	1.00	180,000.00	180,000.00	180,000							

REVIEW DATE 11/08/2023 BY DJ Total Acres: 0.00 Total Land Value: 180,000 Market: 0 Agricultural: 0 Common: 180,000 PRINTED 08/06/2024 BY SYS