LOT 16
IN OR 1677/296
VILLAGES OF WOODBRIDGE #1

MENA LOPEZ TALIA CAMILLE
95603 SONOMA DRIVE
FERNANDINA BEACH, FL 32034

2024

40-2N-28-225V-0001-0160

BUILDING CHARACTERISTICS

ELEMENT	CD	CONSTRUCTION
Exterior Wall	16	WD FR STUC 100
Roof Structur	03	GABLE/HIP 100
Roof Cover	03	COMP SHNGL 100
Interior Wall	05	DRYWALL 100
Interior Floo	14	CARPET 60
Interior Floo	11	CLAY TILE 40
Air Condition	03	CENTRAL 100
Heating Type	04	AIR DUCTED 100
Bedrooms		3 100
Bathrooms		2 100
Frame	02	WOOD FRAME 100
Stories	1.	1. 100
Units		0 100
Occupancy	00	NONE 100
Quality	05	Quality Level 05
DOR CODE	0100	SINGLE FAMILY
MAP NUM		MKT AREA 04
NEIGHBORHOOD/LOC	4068.00	

AREA TYPE	TOTAL GROSS AREA	PCT OF BASE	TOT ADJ AREA	SUBAREA MARKET VALUE
BAS	1,630	100	1,630	178,238
FGR	551	55	303	33,133
FOP	51	30	15	1,640
FOP	120	30	36	3,936
TOTALS	2,352		1,984	216,947

MARKET ADJUSTMENTS

TYPE	MDL	EFF. AREA	TOT ADJ PTS	EFF. BASE RATE	REPL. COST NEW	AYB	EYB	ECON	FNCT		NORM	% COND
0100	01	1,984	123.1076	116.95	232,029	2010	2010	0	0	0	6.50	93.50

1 SINGLE FAM – 100% - 2011 Heated Area: 1630 HX Base Yr 2011

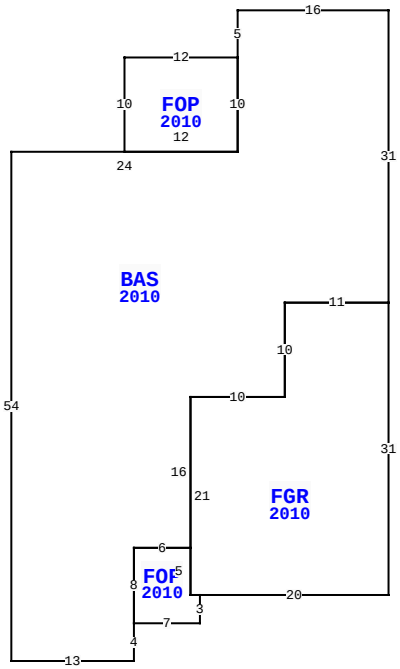

BLD DATE	02/05/2015 KK	LGL DATE	
XF DATE		LAND DATE	05/18/2023 MLU
INC DATE		AG DATE	

95603 SONOMA DR, FERNANDINA BEACH

NASSAU COUNTY PROPERTY

PAGE 1 of 1 4

VALUATION SUMMARY

VALUATION BY		STANDARD
Tax Group: 4	Tax Dist:	
BUILDING MARKET VALUE		216,947
TOTAL MARKET OB/XF VALUE		5,979
TOTAL LAND VALUE - MARKET		75,000
TOTAL MARKET VALUE		297,926
SOH/AGL Deduction		137,089
ASSESSED VALUE		160,837
TOTAL EXEMPTION VALUE	HX HB	50,000
BASE TAXABLE VALUE		110,837
TOTAL JUST VALUE		297,926
NCON VALUE		0
INCOME VALUE		
PREVIOUS YEAR MKT VALUE		269,444

PERMIT NUM	DESCRIPTION	AMT	ISSUED
C23166	CO ISSUED	0	05/06/2010
E22403	ELEC OTHER	0	02/01/2010
M15061	MECH OTHER	0	02/01/2010
P14110	OTHER	0	01/01/2010
B23166	NEW CONSTR	234,610	01/01/2010

SALES DATA

OFF RECORD Number	DATE	TYPE INST	Q U	V I	RSN CD	SALE PRICE
1677/0296	5/13/2010	WD	Q	I	01	160,000
GRANTOR: RICHMOND AMERICAN HOM						
GRANTEE: LOPEZ TALIA CAMILLE						
1361/0587	10/24/2005	WD	U	V	19	5,610,000
GRANTOR: WOODBRIDGE NASSAU JOI						
GRANTEE: RICHMOND AMERICAN H						

BUILDING NOTES

EXTRA FEATURES

LN	OB/XF CODE	DESCRIPTION	BLD	CAP	L	W	UNITS	UT	Adj R	ADJ UNIT PRICE	ORIG COND	YEAR ON	YEAR ACTUAL	Q	% COND	OB/XF MKT VALUE	NOTES
1	0811	CONCRETE B	0	100	0	0	670.00	SF	5.20	5.20	100	2010	2010	3	91	3,170	
2	0476	VF 6 SBPL	0	100	0	0	99.00	LF	32.00	32.00	100	2011	2011	3	81	2,566	
3	0470	VNYL GATE	0	100	0	0	1.00	UT	300.00	300.00	100	2011	2011	3	81	243	

BUILDING DIMENSIONS

BAS=[YR=2010] W16 S5 FOP=[YR=2010] W12 S10 E12 N10 $ S10 W24 S54 E13 N4 FOP=[YR=2010] E7 N3 FGR=[YR=2010] E20 N31 W11 S10 W10 S21 E1 $ W1 N5 W6 S8 $ N8 E6 N16 E10 N10 E11 N31 $.

LAND DESCRIPTION

TOTAL OB/XF 5,979

LN	USE CODE	CLS	LAND USE DESCRIPTION	CAP	RD	LOC ZONE	FRONT	DEPTH	TOT LND UTS	UNIT TYPE	DT	DPTH FACT	% COND	TOT ADJ	UNIT PRICE	ADJ UNIT PRICE	LAND VALUE	OTHER ADJUSTMENTS AND NOTES	YEAR	DENSITY	DECL	FRZ	YR	CONSRV
1	000100	C	SFR	100	0003	PUD	0.00	0.00	1.00	LT		1.00	1.00	1.00	75,000.00	75,000.00	75,000							

REVIEW DATE 05/12/2019 BY KBA Total Acres: 0.00 Total Land Value: 75,000 Market: 0 Agricultural: 0 Common: 75,000 PRINTED 08/06/2024 BY SYS