LOT 165
BARNWELL MANOR PHASE 1
PBK 8/293

MARTINEZ ANTHONY & BREANNA FAMILY REVOCABLE TRUST/
93418 SANDOWN DR
FERNANDINA BEACH, FL 32034

2024

39-2N-28-0141-0165-0000

BUILDING CHARACTERISTICS

ELEMENT	CD	CONSTRUCTION
Exterior Wall	31	HARDIE BRD 100
Roof Structur	08	IRREGULAR 100
Roof Cover	03	COMP SHNGL 100
Interior Wall	05	DRYWALL 100
Interior Floo	13	LVT/LAMNT 50
Interior Floo	14	CARPET 50
Air Condition	03	CENTRAL 100
Heating Type	04	AIR DUCTED 100
Bedrooms		5 100
Bathrooms		4 100
Frame	02	WOOD FRAME 100
Stories	2.	2. 100
Units		0 100
Occupancy	00	NONE 100
Quality	02	Quality Level 02

DOR CODE 0100 SINGLE FAMILY
MAP NUM | MKT AREA 04
NEIGHBORHOOD/LOC 4088.00

AREA TYPE	TOTAL GROSS AREA	PCT OF BASE	TOT ADJ AREA	SUBAREA MARKET VALUE
BAS	1,333	100	1,333	158,762
FGR	685	55	377	44,901
FOP	173	30	52	6,193
FSP	320	40	128	15,245
FUS	1,874	100	1,874	223,196
PTO	180	5	9	1,072
STR	80	10	8	953
TOTALS	4,645		3,781	450,323

MARKET ADJUSTMENTS

TYPE	MDL	EFF. AREA	TOT ADJ PTS	EFF. BASE RATE	REPL. COST NEW	AYB	EYB	ECON	FNCT		NORM	% COND
0900	01	3,781	95.7600	119.70	452,586	2021	2021	0	0	0	0.50	99.50

1 SNGL FAM – 100% - 2022 Heated Area: 3207 HX Base Yr 2022

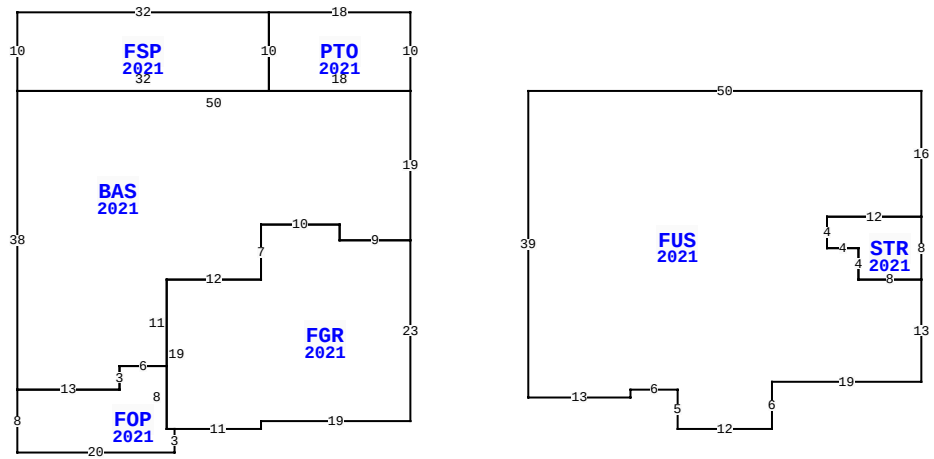

93418 SANDOWN DR, FERNANDINA BEACH

BLD DATE		LGL DATE	
XF DATE		LAND DATE	06/05/2023 MLU
INC DATE		AG DATE	

NASSAU COUNTY PROPERTY

PAGE 1 of 1 4

VALUATION SUMMARY

VALUATION BY		STANDARD
Tax Group: 4	Tax Dist:	
BUILDING MARKET VALUE		450,323
TOTAL MARKET OB/XF VALUE		20,202
TOTAL LAND VALUE - MARKET		75,000
TOTAL MARKET VALUE		545,525
SOH/AGL Deduction		83,490
ASSESSED VALUE		462,035
TOTAL EXEMPTION VALUE	HX HB	50,000
BASE TAXABLE VALUE		412,035
TOTAL JUST VALUE		545,525
NCON VALUE		0
INCOME VALUE		
PREVIOUS YEAR MKT VALUE		525,577

PERMIT NUM	DESCRIPTION	AMT	ISSUED
C2006912	CO ISSUED	0	04/23/2021
B2006912	NEW CONSTR	436,814	09/01/2020

SALES DATA

OFF RECORD Number	DATE	TYPE INST	Q / U	V / I	RSN CD	SALE PRICE
2721/179	6/25/2024	SW	U	I	11	100
GRANTOR: MARTINEZ ANTHONY D &						
GRANTEE: MARTINEZ ANTHONY &						
2456/0266	4/23/2021	SW	Q	I	01	475,000
GRANTOR: AVH NORTH FLORIDA LLC						
GRANTEE: MARTINEZ ANTHONY D						

BUILDING NOTES

BUILDING DIMENSIONS

PTO=[YR=2021] N10 W18 FSP=[YR=2021] W32 S10 E32 N10$ S10 E18$ BAS=[YR=2021] W50 S38 FOP=[YR=2021] S8 E20 N3 FGR=[YR=2021] E11 N1 E19 N23 W9 N2 W10 S7 W12 S19 E1$ W1 N8 W6 S3 W13$ E13 N3 E6 N11 E12 N7 E10 S2 E9 N19$ PTR=E15 FUS=[YR=2021] E50 S16 STR=[YR=2021] S8 W8 N4 W4 N4 E12 $W12 S4 E4 S4 E8 S13 W19 S6 W12 N5 W6 S1 W13 N39$ W15$.

EXTRA FEATURES

LN	OB/XF CODE	DESCRIPTION	BLD	CAP	L	W	UNITS	UT	Adj R	ADJ UNIT PRICE	ORIG COND	YEAR ON	YEAR ACTUAL	Q	% COND	OB/XF MKT VALUE	NOTES
1	0855	CONC PAVER	0	100	0	0	1,060.00	SF	10.00	10.00	100	2021	2021	3	99	10,494	
2	0462	ST/AL FNC	0	100	240	0	960.00	SF	10.00	10.00	100	2021	2021	3	95	9,120	
3	0463	FENCE GATE	0	100	0	0	2.00	UT	300.00	300.00	100	2021	2021	3	98	588	

LAND DESCRIPTION

TOTAL OB/XF 20,202

LN	USE CODE	CLS	LAND USE DESCRIPTION	CAP	RD	LOC ZONE	FRONT	DEPTH	TOT LND UTS	UNIT TYPE	DT	DPTH FACT	% COND	TOT ADJ	UNIT PRICE	ADJ UNIT PRICE	LAND VALUE	OTHER ADJUSTMENTS AND NOTES	YEAR	DENSITY	DECL	FRZ	YR	CONSRV
1	000134	C	SFR POND	100		RSF-1	0.00	0.00	1.00	LT		1.00	1.00	1.00	75,000.00	75,000.00	75,000							

REVIEW DATE 07/21/2021 BY KWJH Total Acres: 0.00 Total Land Value: 75,000 Market: 0 Agricultural: 0 Common: 75,000 PRINTED 08/06/2024 BY SYS