LOT 145
BARNWELL MANOR PHASE 2
OR 2362/1884

SISTERS OF THE ADORATION OF THE BLESSED SACRAMENT
93728 NEWMARKET LN
FERNANDINA BEACH, FL 32034

2024

39-2N-28-0141-0145-0000

NASSAU COUNTY PROPERTY

BUILDING CHARACTERISTICS

ELEMENT	CD	CONSTRUCTION
Exterior Wall	31	HARDIE BRD 100
Roof Structur	08	IRREGULAR 100
Roof Cover	03	COMP SHNGL 100
Interior Wall	05	DRYWALL 100
Interior Floo	13	LVT/LAMNT 60
Interior Floo	14	CARPET 40
Air Condition	03	CENTRAL 100
Heating Type	04	AIR DUCTED 100
Bedrooms		5 100
Bathrooms		4 100
Frame	02	WOOD FRAME 100
Stories	2.	2. 100
Units		0 100
Occupancy	00	NONE 100
Quality	02	Quality Level 02
DOR CODE	0100	SINGLE FAMILY
MAP NUM		MKT AREA 04
NEIGHBORHOOD/LOC	4088.00	

AREA TYPE	TOTAL GROSS AREA	PCT OF BASE	TOT ADJ AREA	SUBAREA MARKET VALUE
BAS	1,333	100	1,333	160,460
FGR	685	55	377	45,381
FOP	50	30	15	1,806
FOP	330	30	99	11,917
FUS	1,861	100	1,861	224,018
STR	80	10	8	963
TOTALS	4,339		3,693	444,545

MARKET ADJUSTMENTS

TYPE	MDL	EFF. AREA	TOT ADJ PTS	EFF. BASE RATE	REPL. COST NEW	AYB	EYB	ECON	FNCT		NORM	% COND
0900	01	3,693	96.7860	120.98	446,779	2021	2021	0	0	0	0.50	99.50

1 SNGL FAM – 0% - 0 Heated Area: 3194 HX Base Yr

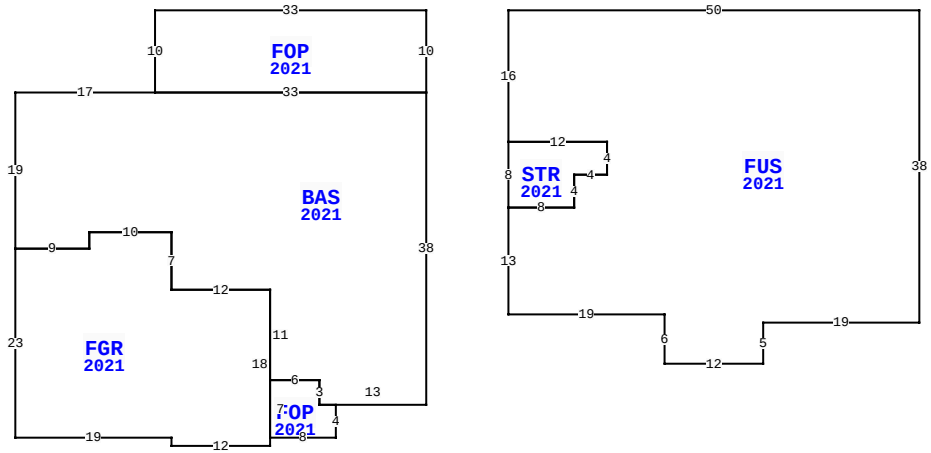

93728 NEWMARKET LN, FERNANDINA BEACH

BLD DATE		LGL DATE	
XF DATE		LAND DATE	06/05/2023 MLU
INC DATE		AG DATE	

VALUATION SUMMARY

VALUATION BY	STANDARD
Tax Group: 4	Tax Dist:
BUILDING MARKET VALUE	444,545
TOTAL MARKET OB/XF VALUE	13,690
TOTAL LAND VALUE - MARKET	75,000
TOTAL MARKET VALUE	533,235
SOH/AGL Deduction	15,316
ASSESSED VALUE	517,919
TOTAL EXEMPTION VALUE	0
BASE TAXABLE VALUE	517,919
TOTAL JUST VALUE	533,235
NCON VALUE	0
INCOME VALUE	
PREVIOUS YEAR MKT VALUE	513,266

PERMIT NUM	DESCRIPTION	AMT	ISSUED
C2100227	CO ISSUED	0	10/01/2021
B2100227	NEW CONSTR	436,470	01/13/2021

SALES DATA

OFF RECORD Number	DATE	TYPE INST	Q / U	V / I	RSN CD	SALE PRICE
2718/1095	4/12/2024	SW	U	I	11	100
GRANTOR: SISTERS OF THE ADORAT						
GRANTEE: SISTERS OF THE ADOR						
2502/0799	9/30/2021	SW	Q	I	01	424,200
GRANTOR: AVH NORTH FLORIDA LLC						
GRANTEE: SISTERS OF THE ADOR						

BUILDING NOTES

EXTRA FEATURES

LN	OB/XF CODE	DESCRIPTION	BLD	CAP	L	W	UNITS	UT	Adj R	ADJ UNIT PRICE	ORIG COND	YEAR ON	YEAR ACTUAL	Q	% COND	OB/XF MKT VALUE	NOTES
1	0812	CONCRETE C	0	0	0	0	1,174.00	SF	4.00	4.00	100	2021	2021	3	99	4,649	
2	0810	CONCRETE A	0	0	3	9	27.00	SF	6.50	6.50	100	2021	2021	3	99	174	
3	0476	VF 6 SBPL	0	0	0	0	264.00	LF	32.00	32.00	100	2021	2021	3	98	8,279	
4	0470	VNYL GATE	0	0	0	0	2.00	UT	300.00	300.00	100	2021	2021	3	98	588	

BUILDING DIMENSIONS

FOP=[YR=2021] W33 S10 BAS=[YR=2021] W17 S19 FGR=[YR=2021] S23 E19 S1 E12 N1 FOP=[YR=2021] E8 N4 W2 N3 W6 S7$ N18 W12 N7 W10 S2 W9$ E9 N2 E10 S7 E12 S11 E6 S3 E13 N38 W33$ E33 N10$ PTR=E10 FUS=[YR=2021] E50 S38 W19 S5 W12 N6 W19 N13 STR=[YR=2021] N8 E12 S4 W4 S4 W8$ E8 N4 E4 N4 W12 N16$ W10$.

LAND DESCRIPTION

TOTAL OB/XF 13,690

LN	USE CODE	CLS	LAND USE DESCRIPTION	CAP	RD	LOC ZONE	FRONT	DEPTH	TOT LND UTS	UNIT TYPE	DT	DPTH FACT	% COND	TOT ADJ	UNIT PRICE	ADJ UNIT PRICE	LAND VALUE	OTHER ADJUSTMENTS AND NOTES	YEAR	DENSITY	DECL	FRZ	YR	CONSRV
1	000100	C	SFR	0		RSF-1	0.00	0.00	1.00	LT		1.00	1.00	1.00	75,000.00	75,000.00	75,000							

REVIEW DATE 01/19/2022 BY DJ Total Acres: 0.00 Total Land Value: 75,000 Market: 0 Agricultural: 0 Common: 75,000 PRINTED 08/06/2024 BY SYS