LOT 117
BARNWELL MANOR PHASE 2
OR 2362/1884

MACERI KEVIN JOHN/CHING SZE NGAR
9624 NW 16 STREET
PEMBROKE PINES, FL 33024

2024

39-2N-28-0141-0117-0000

BUILDING CHARACTERISTICS

ELEMENT	CD	CONSTRUCTION
Exterior Wall	31	HARDIE BRD 100
Roof Structur	08	IRREGULAR 100
Roof Cover	03	COMP SHNGL 100
Interior Wall	05	DRYWALL 100
Interior Floo	13	LVT/LAMNT 60
Interior Floo	14	CARPET 40
Air Condition	03	CENTRAL 100
Heating Type	04	AIR DUCTED 100
Bedrooms		5 100
Bathrooms		4 100
Frame	02	WOOD FRAME 100
Stories	2.	2. 100
Units		0 100
Occupancy	00	NONE 100
Quality	02	Quality Level 02
DOR CODE	0100	SINGLE FAMILY
MAP NUM		MKT AREA 04
NEIGHBORHOOD/LOC	4088.00	

AREA TYPE	TOTAL GROSS AREA	PCT OF BASE	TOT ADJ AREA	SUBAREA MARKET VALUE
BAS	1,333	100	1,333	159,041
FGR	685	55	377	44,980
FOP	173	30	52	6,204
FSP	330	40	132	15,749
FUS	1,874	100	1,874	223,587
STR	80	10	8	954
TOTALS	4,475		3,776	450,516

MARKET ADJUSTMENTS

TYPE	MDL	EFF. AREA	TOT ADJ PTS	EFF. BASE RATE	REPL. COST NEW	AYB	EYB	ECON	FNCT		NORM	% COND
0900	01	3,776	95.9310	119.91	452,780	2021	2021	0	0	0	0.50	99.50

1 SNGL FAM – 100% - 2024 Heated Area: 3207 HX Base Yr 2024

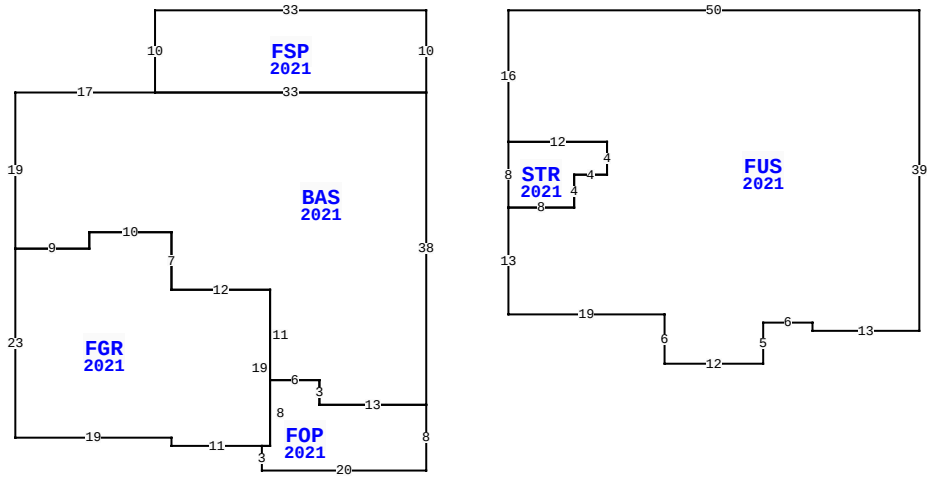

94082 GOODWOOD DR, FERNANDINA BEACH

BLD DATE		LGL DATE	
XF DATE		LAND DATE	06/05/2023 MLU
INC DATE		AG DATE	

NASSAU COUNTY PROPERTY

PAGE 1 of 1 4

VALUATION SUMMARY

VALUATION BY		STANDARD
Tax Group: 4	Tax Dist:	
BUILDING MARKET VALUE		450,516
TOTAL MARKET OB/XF VALUE		12,820
TOTAL LAND VALUE - MARKET		75,000
TOTAL MARKET VALUE		538,336
SOH/AGL Deduction		30,460
ASSESSED VALUE		507,876
TOTAL EXEMPTION VALUE	HX HB	50,000
BASE TAXABLE VALUE		457,876
TOTAL JUST VALUE		538,336
NCON VALUE		0
INCOME VALUE		
PREVIOUS YEAR MKT VALUE		518,112

PERMIT NUM	DESCRIPTION	AMT	ISSUED
C2105667	CO ISSUED	0	01/03/2022
B2105667	NEW CONSTR	441,152	05/04/2021

SALES DATA

OFF RECORD Number	DATE	TYPE INST	Q U	V I	RSN CD	SALE PRICE
2672/1806	8/21/2023	WD	Q	I	01	675,000
GRANTOR: WAHL JEFFREY DEAN & M						
GRANTEE: MACERI KEVIN JOHN						
2538/1678	12/29/2021	SW	Q	I	01	576,200
GRANTOR: AVH NORTH FLORIDA LLC						
GRANTEE: WAHL JEFFREY DEAN &						

BUILDING NOTES

BUILDING DIMENSIONS

FSP=[YR=2021] W33 S10 BAS=[YR=2021] W17 S19 FGR=[YR=2021] S23 E19 S1 E11 FOP=[YR=2021] S3 E20 N8 W13 N3 W6 S8 W1$ E1 N19 W12 N7 W10 S2 W9$ E9 N2 E10 S7 E12 S11 E6 S3 E13 N38 W33$ E33 N10$ PTR=E10 FUS=[YR=2021] E50 S39 W13 N1 W6 S5 W12 N6 W19 N13 STR=[YR=2021] N8 E12 S4 W4 S4 W8$ E8 N4 E4 N4 W12 N16$ W10$.

EXTRA FEATURES

LN	OB/XF CODE	DESCRIPTION	BLD	CAP	L	W	UNITS	UT	Adj R	ADJ UNIT PRICE	ORIG COND	YEAR ON	YEAR ACTUAL	Q	% COND	OB/XF MKT VALUE	NOTES
1	0855	CONC PAVER	0	100	0	0	1,256.00	SF	10.00	10.00	100	2021	2021	3	99	12,434	
2	0855	CONC PAVER	0	100	3	13	39.00	SF	10.00	10.00	100	2021	2021	3	99	386	

LAND DESCRIPTION

TOTAL OB/XF 12,820

LN	USE CODE	CLS	LAND USE DESCRIPTION	CAP	RD	LOC ZONE	FRONT	DEPTH	TOT LND UTS	UNIT TYPE	DT	DPTH FACT	% COND	TOT ADJ	UNIT PRICE	ADJ UNIT PRICE	LAND VALUE	OTHER ADJUSTMENTS AND NOTES	YEAR	DENSITY	DECL	FRZ	YR	CONSRV
1	000134	C	SFR POND	100		RSF-1	0.00	0.00	1.00	LT		1.00	1.00	1.00	75,000.00	75,000.00	75,000							

REVIEW DATE 01/20/2022 BY DJ Total Acres: 0.00 Total Land Value: 75,000 Market: 0 Agricultural: 0 Common: 75,000 PRINTED 08/06/2024 BY SYS