LOT 56
BARNWELL MANOR PHASE 3
OR 2445/770

CLAYTON SEAN ABDUL & KELLI MARIE
92840 SHIPTON LN
FERNANDINA BEACH, FL 32034

2024

39-2N-28-0141-0056-0000

NASSAU COUNTY PROPERTY

BUILDING CHARACTERISTICS

ELEMENT	CD	CONSTRUCTION
Exterior Wall	31	HARDIE BRD 100
Roof Structur	08	IRREGULAR 100
Roof Cover	03	COMP SHNGL 100
Interior Wall	05	DRYWALL 100
Interior Floo	11	CLAY TILE 70
Interior Floo	14	CARPET 30
Air Condition	03	CENTRAL 100
Heating Type	04	AIR DUCTED 100
Bedrooms		4 100
Bathrooms		3.5 100
Frame	02	WOOD FRAME 100
Stories	2.	2. 100
Quality	02	Quality Level 02

DOR CODE	0100	SINGLE FAMILY	
MAP NUM		MKT AREA	04
NEIGHBORHOOD/LOC	4088.00		

AREA TYPE	TOTAL GROSS AREA	PCT OF BASE	TOT ADJ AREA	SUBAREA MARKET VALUE
BAS	2,236	100	2,236	278,293
FGR	240	55	132	16,429
FGR	441	55	243	30,244
FOP	85	30	26	3,236
FSP	348	40	139	17,300
FST	24	55	13	1,618
FUS	1,239	100	1,239	154,206
STR	0	10	0	0
UOP	558	20	112	13,940
TOTALS	5,171		4,140	515,264

MARKET ADJUSTMENTS

TYPE	MDL	EFF. AREA	TOT ADJ PTS	EFF. BASE RATE	REPL. COST NEW	AYB	EYB	ECON	FNCT		NORM	% COND
0900	01	4,140	99.5676	124.46	515,264	2023	2023	0	0	0	0.00	100.00

1 SNGL FAM – 100% - 2024 Heated Area: 3475 HX Base Yr 2024

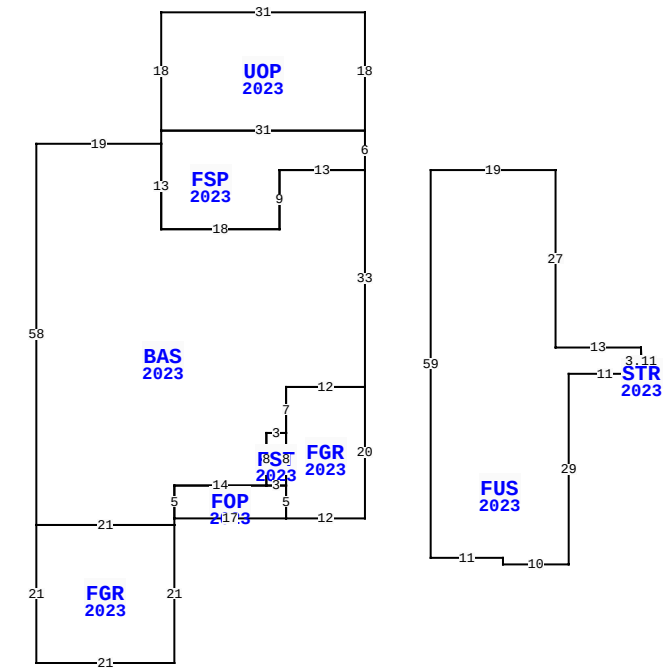

92840 SHIPTON LN, FERNANDINA BEACH

BLD DATE		LGL DATE	
XF DATE		LAND DATE	06/05/2023 MLU
INC DATE		AG DATE	

NASSAU COUNTY PROPERTY — VALUATION SUMMARY

VALUATION BY		STANDARD
Tax Group: 4	Tax Dist:	
BUILDING MARKET VALUE		515,264
TOTAL MARKET OB/XF VALUE		15,560
TOTAL LAND VALUE - MARKET		75,000
TOTAL MARKET VALUE		605,824
SOH/AGL Deduction		96,312
ASSESSED VALUE		509,512
TOTAL EXEMPTION VALUE	HX HB	50,000
BASE TAXABLE VALUE		459,512
TOTAL JUST VALUE		605,824
NCON VALUE		530,824
INCOME VALUE		
PREVIOUS YEAR MKT VALUE		75,000

PERMIT NUM	DESCRIPTION	AMT	ISSUED
SP240005549	CONCRETE SWIMMING	40,000	05/08/2024
B230009865		58,000	08/01/2023
22016229	NEW CONSTR	556,972	10/28/2022

SALES DATA

OFF RECORD Number	DATE	TYPE INST	Q / U	V / I	RSN CD	SALE PRICE
2647/110	6/08/2023	SW	Q	I	01	807,100

GRANTOR: AVH NORTH FLORIDA LLC
GRANTEE: CLAYTON SEAN ABDUL

BUILDING NOTES

EXTRA FEATURES

LN	OB/XF CODE	DESCRIPTION	BLD	CAP	L	W	UNITS	UT	Adj R	ADJ UNIT PRICE	ORIG COND	YEAR ON	YEAR ACTUAL	Q	% COND	OB/XF MKT VALUE	NOTES
1	0855	CONC PAVER	0	100	0	0	1,382.00	SF	10.00	10.00	100	2023	2023		100	13,820	
2	0855	CONC PAVER	0	100	0	0	66.00	SF	10.00	10.00	100	2023	2023		100	660	
3	1076	TRELLIS A	0	100	0	0	144.00	SF	7.50	7.50	100	2023	2023		100	1,080	

BUILDING DIMENSIONS

BAS=[YR=2023;ORIG=80,0] W13 S9 W18 N13 W19 S58 E21 N1 N5 E14 N8 E3 N7 E12 N33 $
FGR=[YR=2023;ORIG=80,33] W12 S7 S8 S5 E12 N20 $
FST=[YR=2023;ORIG=65,40] E3 S8 W3 N8 $
FOP=[YR=2023;ORIG=51,53] E17 N5 W3 W14 S5 $
FGR=[YR=2023;ORIG=30,54] E21 S21 W21 N21 $
FSP=[YR=2023;ORIG=49,-6] S2 S13 E18 N9 E13 N6 W31 $
UOP=[YR=2023;ORIG=80,-6] W31 N18 E31 S18 $
FUS=[YR=2023;ORIG=90,0] E19 S27 E13 S4 W11 S29 W10 N1 W11 N59 $
STR=[YR=2023;ORIG=122.1,31] U3.11L0.1 D3.11R0.1 E7 N4 W7.1 $
.

LAND DESCRIPTION

TOTAL OB/XF 15,560

LN	USE CODE	CLS	LAND USE DESCRIPTION	CAP	RD	LOC ZONE	FRONT	DEPTH	TOT LND UTS	UNIT TYPE	DT	DPTH FACT	% COND	TOT ADJ	UNIT PRICE	ADJ UNIT PRICE	LAND VALUE	OTHER ADJUSTMENTS AND NOTES	YEAR	DENSITY	DECL	FRZ	YR	CONSRV
1	000134	C	SFR POND	100		RSF-1	90.00	130.00	1.00	LT		1.00	1.00	1.00	75,000.00	75,000.00	75,000							

REVIEW DATE 07/23/2024 BY NW Total Acres: 0.00 Total Land Value: 75,000 Market: 0 Agricultural: 0 Common: 75,000 PRINTED 08/06/2024 BY SYS