LOT 44
BARNWELL MANOR PHASE 3
OR 2445/770

CARFAGNO JACK N & CHERYL ANN
92697 SHIPTON LANE
FERNANDINA BEACH, FL 32034

2024

39-2N-28-0141-0044-0000

BUILDING CHARACTERISTICS

ELEMENT	CD	CONSTRUCTION
Exterior Wall	31	HARDIE BRD 100
Roof Structur	03	GABLE/HIP 100
Roof Cover	03	COMP SHNGL 100
Interior Wall	05	DRYWALL 100
Interior Floo	11	CLAY TILE 50
Interior Floo	14	CARPET 50
Air Condition	03	CENTRAL 100
Heating Type	04	AIR DUCTED 100
Bedrooms		4 100
Bathrooms		3.5 100
Frame	02	WOOD FRAME 100
Stories	2.	2. 100
Units		0 100
Quality	02	Quality Level 02
DOR CODE	0100	SINGLE FAMILY
MAP NUM		MKT AREA 04
NEIGHBORHOOD/LOC	4088.00	

AREA TYPE	TOTAL GROSS AREA	PCT OF BASE	TOT ADJ AREA	SUBAREA MARKET VALUE
BAS	2,451	100	2,451	302,551
FGR	809	55	445	54,931
FOP	50	30	15	1,852
FOP	168	30	50	6,172
FUS	690	100	690	85,174
STR	52	10	5	617
TOTALS	4,220		3,656	451,297

MARKET ADJUSTMENTS

TYPE	MDL	EFF. AREA	TOT ADJ PTS	EFF. BASE RATE	REPL. COST NEW	AYB	EYB	ECON	FNCT		NORM	% COND
0900	01	3,656	98.7525	123.44	451,297	2023	2023	0	0	0	0.00	100.00

1 SNGL FAM – 100% - 2024 Heated Area: 3141 HX Base Yr 2024

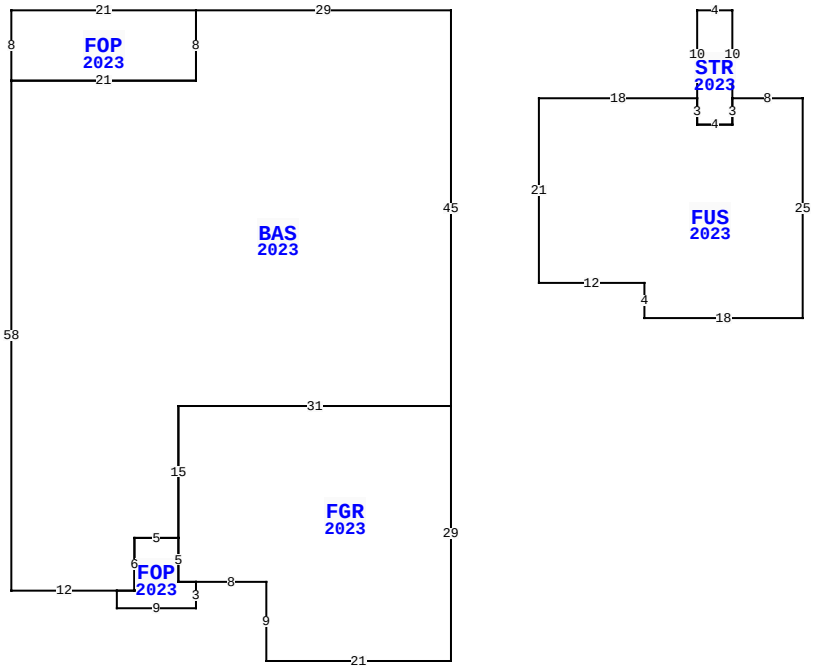

92697 SHIPTON LN, FERNANDINA BEACH

BLD DATE		LGL DATE	
XF DATE		LAND DATE	06/05/2023 MLU
INC DATE		AG DATE	

NASSAU COUNTY PROPERTY

PAGE 1 of 1 4

VALUATION SUMMARY

VALUATION BY		STANDARD
Tax Group: 4	Tax Dist:	
BUILDING MARKET VALUE		451,297
TOTAL MARKET OB/XF VALUE		26,630
TOTAL LAND VALUE - MARKET		75,000
TOTAL MARKET VALUE		552,927
SOH/AGL Deduction		0
ASSESSED VALUE		552,927
TOTAL EXEMPTION VALUE	HX HB	50,000
BASE TAXABLE VALUE		502,927
TOTAL JUST VALUE		552,927
NCON VALUE		477,927
INCOME VALUE		
PREVIOUS YEAR MKT VALUE		75,000

PERMIT NUM	DESCRIPTION	AMT	ISSUED
B240006206	SCREEN ENCLOSURE	13,000	05/23/2024
22009279	NEW CONSTR	519,771	06/17/2022

SALES DATA

OFF RECORD Number	DATE	TYPE INST	Q / U	V / I	RSN CD	SALE PRICE
2629/0796	3/31/2023	SW	Q	I	01	646,000

GRANTOR: AVH NORTH FLORIDA LLC
GRANTEE: CARGAGNO JACK NICHO

BUILDING NOTES

BUILDING DIMENSIONS

BAS=[YR=2023;ORIG=60,10] W29 S8 W21 S58 E12 E2 N6 E5 N15 E31 N45 $
FOP=[YR=2023;ORIG=10,10] S8 E21 N8 W21 $
FGR=[YR=2023;ORIG=29,55] E31 S29 W21 N9 W8 W2 N5 N15 $
FOP=[YR=2023;ORIG=24,70] E5 S5 E2 S3 W9 N2 E2 N6 $
FUS=[YR=2023;ORIG=70,20] E18 S3 E4 N3 E8 S25 W18 N4 W12 N21 $
STR=[YR=2023;ORIG=88,20] S3 E4 N3 N10 W4 S10 $
.

EXTRA FEATURES

LN	OB/XF CODE	DESCRIPTION	BLD	CAP	L	W	UNITS	UT	Adj R	ADJ UNIT PRICE	ORIG COND	YEAR ON	YEAR ACTUAL	Q	% COND	OB/XF MKT VALUE	NOTES
1	0855	CONC PAVER	0	100	0	0	1,496.00	SF	10.00	10.00	100	2023	2023		100	14,960	
2	0855	CONC PAVER	0	100	55	3	165.00	SF	10.00	10.00	100	2023	2023		100	1,650	
3	0462	ST/AL FNC	0	100	0	0	912.00	SF	10.00	10.00	100	2023	2023		100	9,120	
4	0463	FENCE GATE	0	100	0	0	3.00	UT	300.00	300.00	100	2023	2023		100	900	

LAND DESCRIPTION

TOTAL OB/XF 26,630

LN	USE CODE	CLS	LAND USE DESCRIPTION	CAP	RD	LOC ZONE	FRONT	DEPTH	TOT LND UTS	UNIT TYPE	DT	DPTH FACT	% COND	TOT ADJ	UNIT PRICE	ADJ UNIT PRICE	LAND VALUE	OTHER ADJUSTMENTS AND NOTES	YEAR	DENSITY	DECL	FRZ	YR	CONSRV
1	000100	C	SFR	100		RSF-1	90.00	130.00	1.00	LT		1.00	1.00	1.00	75,000.00	75,000.00	75,000							

REVIEW DATE 07/23/2024 BY NW Total Acres: 0.00 Total Land Value: 75,000 Market: 0 Agricultural: 0 Common: 75,000 PRINTED 08/06/2024 BY SYS