LOT 38
BARNWELL MANOR PHASE 3
OR 2445/770

MILLS SAMUEL BROWN CHASE & RAQUEL OLIVEIRA DO AMAR
92519 SHIPTON LANE
FERNANDINA BEACH, FL 32034

2024

39-2N-28-0141-0038-0000

BUILDING CHARACTERISTICS

ELEMENT	CD	CONSTRUCTION
Exterior Wall	31	HARDIE BRD 100
Roof Structur	03	GABLE/HIP 100
Roof Cover	03	COMP SHNGL 100
Interior Wall	05	DRYWALL 100
Interior Floo	11	CLAY TILE 50
Interior Floo	14	CARPET 50
Air Condition	03	CENTRAL 100
Heating Type	04	AIR DUCTED 100
Bedrooms		5 100
Bathrooms		4 100
Frame	02	WOOD FRAME 100
Stories	2.	2. 100
Quality	02	Quality Level 02
DOR CODE	0100	SINGLE FAMILY
MAP NUM		MKT AREA 04
NEIGHBORHOOD/LOC	4088.00	

AREA TYPE	TOTAL GROSS AREA	PCT OF BASE	TOT ADJ AREA	SUBAREA MARKET VALUE
BAS	1,333	100	1,333	165,972
FGR	685	55	377	46,940
FOP	50	30	15	1,868
FOP	180	30	54	6,724
FUS	1,861	100	1,861	231,713
STR	80	10	8	996
TOTALS	4,189		3,648	454,212

MARKET ADJUSTMENTS

TYPE	MDL	EFF. AREA	TOT ADJ PTS	EFF. BASE RATE	REPL. COST NEW	AYB	EYB	ECON	FNCT		NORM	% COND
0900	01	3,648	99.6075	124.51	454,212	2023	2023	0	0	0	0.00	100.00

1 SNGL FAM – 100% - 2024 Heated Area: 3194 HX Base Yr 2024

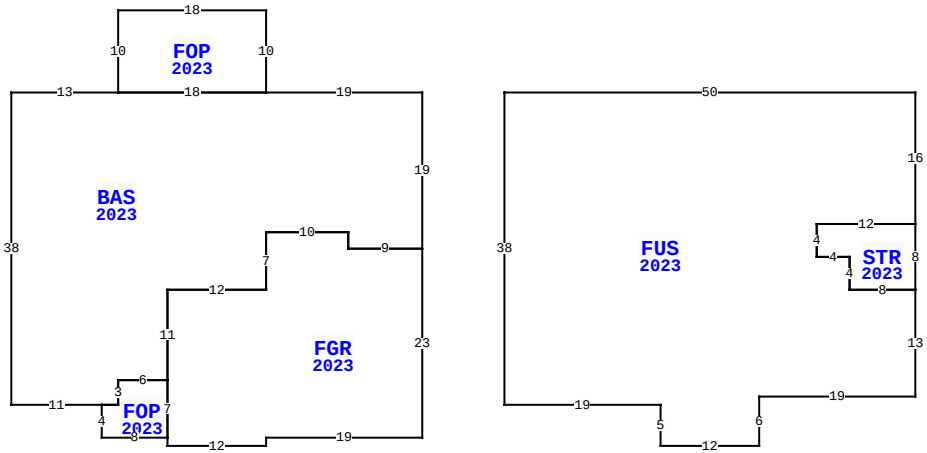

BLD DATE		LGL DATE	
XF DATE		LAND DATE	06/05/2023 MLU
INC DATE		AG DATE	

92519 SHIPTON LN, FERNANDINA BEACH

NASSAU COUNTY PROPERTY

PAGE 1 of 1 4

VALUATION SUMMARY

VALUATION BY		STANDARD
Tax Group: 4	Tax Dist:	
BUILDING MARKET VALUE		454,212
TOTAL MARKET OB/XF VALUE		12,150
TOTAL LAND VALUE - MARKET		75,000
TOTAL MARKET VALUE		541,362
SOH/AGL Deduction		83,478
ASSESSED VALUE		457,884
TOTAL EXEMPTION VALUE	HX HB	50,000
BASE TAXABLE VALUE		407,884
TOTAL JUST VALUE		541,362
NCON VALUE		466,362
INCOME VALUE		
PREVIOUS YEAR MKT VALUE		75,000

PERMIT NUM	DESCRIPTION	AMT	ISSUED
CO230010067	CO		08/07/2023
22017585	NEW CONSTR	582,046	11/29/2022

SALES DATA

OFF RECORD Number	DATE	TYPE INST	Q / U	V / I	RSN CD	SALE PRICE
2660/1183	8/10/2023	SW	U	I	42	608,000

GRANTOR: AVH NORTH FLORIDA LLC
GRANTEE: MILLS SAMUEL BROWN

EXTRA FEATURES

LN	OB/XF CODE	DESCRIPTION	BLD	CAP	L	W	UNITS	UT	Adj R	ADJ UNIT PRICE	ORIG COND	YEAR ON	YEAR ACTUAL	Q	% COND	OB/XF MKT VALUE	NOTES
1	0855	CONC PAVER	0	100	0	0	1,215.00	SF	10.00	10.00	100	2023	2023		100	12,150	

BUILDING NOTES

BUILDING DIMENSIONS

BAS=[YR=2023;ORIG=70,10] W19 W18 W13 S38 E11 E2 N3 E6 N11 E12 N7 E10 S2 E9 N19 $
FOP=[YR=2023;ORIG=33,0] E18 S10 W18 N10 $
FGR=[YR=2023;ORIG=39,34] E12 N7 E10 S2 E9 S23 W19 S1 W12 N1 N7 N11 $
FOP=[YR=2023;ORIG=33,45] E6 S7 W8 N4 E2 N3 $
FUS=[YR=2023;ORIG=80,10] E50 S16 W12 S4 E4 S4 E8 S13 W19 S6 W12 N5 W19 N38 $
STR=[YR=2023;ORIG=118,26] E12 S8 W8 N4 W4 N4 $
.

LAND DESCRIPTION

TOTAL OB/XF 12,150

LN	USE CODE	CLS	LAND USE DESCRIPTION	CAP	RD	LOC ZONE	FRONT	DEPTH	TOT LND UTS	UNIT TYPE	DT	DPTH FACT	% COND	TOT ADJ	UNIT PRICE	ADJ UNIT PRICE	LAND VALUE	OTHER ADJUSTMENTS AND NOTES	YEAR	DENSITY	DECL	FRZ	YR	CONSRV
1	000100	C	SFR	100		RSF-1	90.00	130.00	1.00	LT		1.00	1.00	1.00	75,000.00	75,000.00	75,000							

REVIEW DATE 07/13/2023 BY DJ Total Acres: 0.00 Total Land Value: 75,000 Market: 0 Agricultural: 0 Common: 75,000 PRINTED 08/06/2024 BY SYS