LOT 12
BRADY POINT PRESERVE #2
PB 7/100

ESPY SUSAN ELAINE/STYLES DIANE AMELIA
95024 SHELL MIDDEN LANE
FERNANDINA BEACH, FL 32034

2024

38-2N-28-0181-0012-0000

NASSAU COUNTY PROPERTY

BUILDING CHARACTERISTICS

ELEMENT	CD	CONSTRUCTION
Exterior Wall	31	HARDIE BRD 100
Roof Structur	08	IRREGULAR 100
Roof Cover	03	COMP SHNGL 100
Interior Wall	05	DRYWALL 100
Interior Floo	12	HARDWOOD 60
Interior Floo	14	CARPET 40
Air Condition	03	CENTRAL 100
Heating Type	04	AIR DUCTED 100
Bedrooms		3 100
Bathrooms		2.5 100
Frame	02	WOOD FRAME 100
Stories	1.	1. 100
Units		0 100
Quality	03	Quality Level 03
DOR CODE	0100	SINGLE FAMILY
MAP NUM		MKT AREA 04
NEIGHBORHOOD/LOC	4014.00	

AREA TYPE	TOTAL GROSS AREA	PCT OF BASE	TOT ADJ AREA	SUBAREA MARKET VALUE
BAS	2,859	100	2,859	548,985
FGR	808	55	444	85,257
FOP	242	30	73	14,017
FOP	250	30	75	14,402
STP	6	10	1	192
STP	18	10	2	384
STP	18	10	2	384
UOP	84	20	17	3,264
USP	945	30	284	54,534
TOTALS	5,230		3,757	721,419

MARKET ADJUSTMENTS

TYPE	MDL	EFF. AREA	TOT ADJ PTS	EFF. BASE RATE	REPL. COST NEW	AYB	EYB	ECON	FNCT		NORM	% COND
0500	11	3,757	128.0160	192.02	721,419	2023	2023	0	0	0	0.00	100.00

1 SFR CUST – 100% - 2024 Heated Area: 2859 HX Base Yr 2024

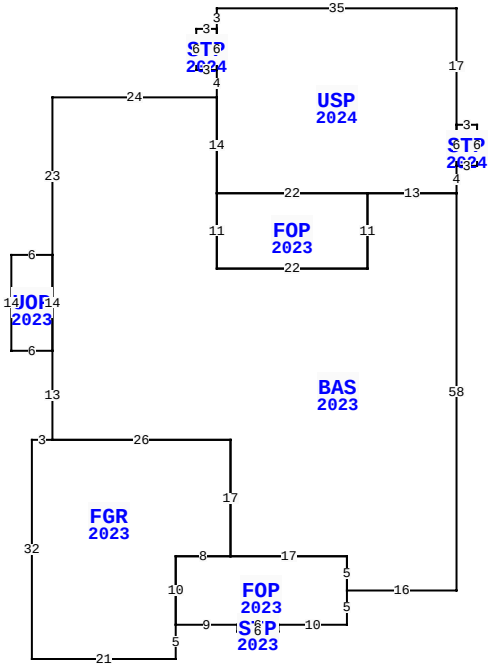

95024 SHELL MIDDEN LN, FERNANDINA BEACH

BLD DATE		LGL DATE	
XF DATE		LAND DATE	03/15/2024 MLU
INC DATE		AG DATE	

VALUATION SUMMARY

VALUATION BY		STANDARD
Tax Group: 4	Tax Dist:	
BUILDING MARKET VALUE		721,419
TOTAL MARKET OB/XF VALUE		52,400
TOTAL LAND VALUE - MARKET		195,000
TOTAL MARKET VALUE		968,819
SOH/AGL Deduction		0
ASSESSED VALUE		968,819
TOTAL EXEMPTION VALUE	HX HB	50,000
BASE TAXABLE VALUE		918,819
TOTAL JUST VALUE		968,819
NCON VALUE		773,819
INCOME VALUE		
PREVIOUS YEAR MKT VALUE		185,000

PERMIT NUM	DESCRIPTION	AMT	ISSUED
B230006458	SCRN ENCL	8,424	05/18/2023
22017614	SWIM POOL	85,838	11/30/2022
21016943	NEW CONSTR	491,268	12/08/2021

SALES DATA

OFF RECORD Number	DATE	TYPE INST	Q / U	V / I	RSN CD	SALE PRICE
2499/0120	9/22/2021	WD	U	V	11	100
GRANTOR: ESPY SUSAN E & DIANE						
GRANTEE: ESPY SUSAN E & DIAN						
2465/1974	5/28/2021	WD	Q	V	01	160,000
GRANTOR: THE RANGE AT AMELIA L						
GRANTEE: ESPY SUSAN ELAINE &						

BUILDING NOTES

EXTRA FEATURES

LN	OB/XF CODE	DESCRIPTION	BLD	CAP	L	W	UNITS	UT	Adj R	ADJ UNIT PRICE	ORIG COND	YEAR ON	YEAR ACTUAL	Q	% COND	OB/XF MKT VALUE	NOTES
1	0500	FP-PRE FAB	0	100	0	0	1.00	UT	3,500.00	3,500.00	100	2023	2023		100	3,500	
2	0855	CONC PAVER	0	100	0	0	2,154.00	SF	10.00	10.00	100	2023	2023		100	21,540	
3	0855	CONC PAVER	0	100	0	0	200.00	SF	10.00	10.00	100	2023	2023		100	2,000	
4	0600	SUMMER KIT	0	100	0	0	1.00	UT	5,000.00	5,000.00	100	2023	2023		100	5,000	
5	0861	POOL GUNIT	0	100	0	0	216.00	SF	85.00	85.00	100	2024	2023		100	18,360	
6	0871	POOL HTR R	0	100	0	0	1.00	UT	2,000.00	2,000.00	100	2024	2023		100	2,000	

BUILDING DIMENSIONS

BAS=[YR=2023;ORIG=80,10] W13 S11 W22 N11 N14 W24 S23 S14 S13 E26 S17 E17 S5 E16 N58 $
FGR=[YR=2023;ORIG=18,46] E3 E26 S17 W8 S10 S5 W21 N32 $
FOP=[YR=2023;ORIG=39,63] E8 E17 S5 S5 W10 W6 W9 N10 $
FOP=[YR=2023;ORIG=45,10] E22 S11 W22 N11 $
UOP=[YR=2023;ORIG=15,19] E6 S14 W6 N14 $
STP=[YR=2023;ORIG=48,73] E6 S1 W6 N1 $
USP=[YR=2024;ORIG=45,10] E22 E13 N4 N6 N17 W35 S3 S6 S4 S14 $
STP=[YR=2024;ORIG=80,0] E3 S6 W3 N6 $
STP=[YR=2024;ORIG=45,-14] W3 S6 E3 N6 $
.

LAND DESCRIPTION

TOTAL OB/XF 52,400

LN	USE CODE	CLS	LAND USE DESCRIPTION	CAP	RD	LOC ZONE	FRONT	DEPTH	TOT LND UTS	UNIT TYPE	DT	DPTH FACT	% COND	TOT ADJ	UNIT PRICE	ADJ UNIT PRICE	LAND VALUE	OTHER ADJUSTMENTS AND NOTES	YEAR	DENSITY	DECL	FRZ	YR	CONSRV
1	000134	C	SFR POND	100		RSF-1	0.00	0.00	1.00	LT		1.00	1.00	1.00	195,000.00	195,000.00	195,000							

REVIEW DATE 01/08/2024 BY DJ Total Acres: 0.00 Total Land Value: 195,000 Market: 0 Agricultural: 0 Common: 195,000 PRINTED 08/06/2024 BY SYS