LOT 52
BRADY POINT PRESERVE PB 7/76

PHILLIPS DAVID & BEVERLY
96197 BRADY POINT RD
FERNANDINA BEACH, FL 32034

2024

38-2N-28-0180-0052-0000

NASSAU COUNTY PROPERTY

BUILDING CHARACTERISTICS

ELEMENT	CD	CONSTRUCTION
Exterior Wall	31	HARDIE BRD 70
Exterior Wall	20	FACE BRICK 30
Roof Structur	08	IRREGULAR 100
Roof Cover	03	COMP SHNGL 100
Interior Wall	05	DRYWALL 100
Interior Floo	12	HARDWOOD 60
Interior Floo	14	CARPET 40
Air Condition	03	CENTRAL 100
Heating Type	04	AIR DUCTED 100
Bedrooms		4 100
Bathrooms		3.5 100
Frame	02	WOOD FRAME 100
Stories	2.	2. 100
Units		0 100
Quality	03	Quality Level 03

DOR CODE	0100	SINGLE FAMILY	
MAP NUM		MKT AREA	04
NEIGHBORHOOD/LOC	4014.00		

AREA TYPE	TOTAL GROSS AREA	PCT OF BASE	TOT ADJ AREA	SUBAREA MARKET VALUE
BAS	2,093	100	2,093	361,389
FGR	718	55	395	68,203
FOP	165	30	50	8,634
FSP	629	40	252	43,511
FUS	1,277	100	1,277	220,494
TOTALS	4,882		4,067	702,231

MARKET ADJUSTMENTS

TYPE	MDL	EFF. AREA	TOT ADJ PTS	EFF. BASE RATE	REPL. COST NEW	AYB	EYB	ECON	FNCT		NORM	% COND
0500	11	4,067	126.2888	189.43	770,412	2007	2007	0	0	0	8.85	91.15

1 SFR CUST – 100% - 2021 Heated Area: 3370 HX Base Yr 2021

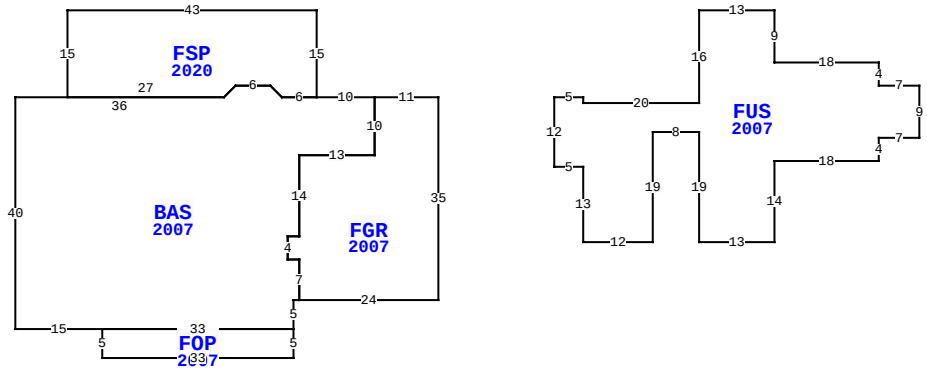

BLD DATE		LGL DATE	
XF DATE		LAND DATE	03/15/2024 MLU
INC DATE		AG DATE	

96197 BRADY POINT RD, FERNANDINA BEACH

VALUATION SUMMARY

VALUATION BY		STANDARD
Tax Group: 4	Tax Dist:	
BUILDING MARKET VALUE		702,231
TOTAL MARKET OB/XF VALUE		22,794
TOTAL LAND VALUE - MARKET		195,000
TOTAL MARKET VALUE		920,025
SOH/AGL Deduction		182,320
ASSESSED VALUE		737,705
TOTAL EXEMPTION VALUE	HX HB	50,000
BASE TAXABLE VALUE		687,705
TOTAL JUST VALUE		920,025
NCON VALUE		0
INCOME VALUE		
PREVIOUS YEAR MKT VALUE		834,790

PERMIT NUM	DESCRIPTION	AMT	ISSUED
M12009	MECH OTHER	0	09/01/2006
E17875	ELEC OTHER	3,300	08/01/2006
P11403	OTHER	0	08/01/2006
C18032	CO ISSUED	0	06/01/2006
B0618032	NEW CONSTR	369,222	06/01/2006
R0609450	REPAIR/RRF	6,000	06/01/2006

SALES DATA

OFF RECORD Number	DATE	TYPE INST	Q / U	V / I	RSN CD	SALE PRICE
2408/1332	11/13/2020	WD	Q	I	02	845,000
GRANTOR: NEIL WILLIAM & SANDRA						
GRANTEE: PHILLIPS DAVID & BE						
1320/1950	5/31/2005	WD	Q	V		153,000
GRANTOR: BRADY POINT PRESERVE						
GRANTEE: NEIL WILLIAM & SAND						

BUILDING NOTES

BUILDING DIMENSIONS

FGR=[YR=2007] W11 BAS=[YR=2007] W10 FSP=[YR=2020] N15 W43 S15 E27 U2 R2 E6 D2 R2 E6 $ W6 U2 L2 W6 D2 L2 W36 S40 E15 FOP=[YR=2007] S5 E33 N5 W33 $ E33 N5 E1 N7 W2 N4 E2 N14 E13 N10$ S10 W13 S14 W2 S4 E2 S7 E24 N35 $ PTR= E20 FUS=[YR=2007] E5 S1 E20 N16 E13 S9 E18 S4 E7 S9 W7 S4 W18 S14 W13 N19 W8 S19 W12 N13 W5 N12$ W20 $.

EXTRA FEATURES

LN	OB/XF CODE	DESCRIPTION	BLD	CAP	L	W	UNITS	UT	Adj R	ADJ UNIT PRICE	ORIG COND	YEAR ON	YEAR ACTUAL	Q	% COND	OB/XF MKT VALUE	NOTES
1	0811	CONCRETE B	0	100	0	0	2,798.00	SF	5.20	5.20	100	2007	2007	3	88	12,804	
2	1127	BRICK 8"	0	100	0	0	104.00	SF	11.00	11.00	100	2007	2007	3	97	1,110	
3	0504	FP-ELECTRI	0	100	0	0	1.00	UT	2,000.00	2,000.00	100	2007	2007	3	91	1,820	
4	0500	FP-PRE FAB	0	100	0	0	1.00	UT	3,500.00	3,500.00	100	2007	2007	3	91	3,185	
5	0600	SUMMER KIT	0	100	0	0	1.00	UT	12,500.00	12,500.00	100	2007	2007	3	31	3,875	

LAND DESCRIPTION

TOTAL OB/XF 22,794

LN	USE CODE	CLS	LAND USE DESCRIPTION	CAP	RD	LOC ZONE	FRONT	DEPTH	TOT LND UTS	UNIT TYPE	DT	DPTH FACT	% COND	TOT ADJ	UNIT PRICE	ADJ UNIT PRICE	LAND VALUE	OTHER ADJUSTMENTS AND NOTES	YEAR	DENSITY	DECL	FRZ	YR	CONSRV
1	000135	C	SFR CNSVTN	100		RSF-1	0.00	0.00	1.00	LT		1.00	1.00	1.00	195,000.00	195,000.00	195,000							

REVIEW DATE 04/26/2021 BY KWA Total Acres: 0.00 Total Land Value: 195,000 Market: 0 Agricultural: 0 Common: 195,000 PRINTED 08/06/2024 BY SYS