LOT 41
IN OR 2076/1267
BRADY POINT PRESERVE PB 7/76

CHISM WAYNE & LORIE L
96047 BRADY POINT RD
FERNANDINA BEACH, FL 32034

2024

38-2N-28-0180-0041-0000

BUILDING CHARACTERISTICS

ELEMENT	CD	CONSTRUCTION
Exterior Wall	10	ABOVE AVG 100
Roof Structur	08	IRREGULAR 100
Roof Cover	03	COMP SHNGL 80
Roof Cover	12	MODULAR MT 20
Interior Wall	05	DRYWALL 100
Interior Floo	14	CARPET 60
Interior Floo	12	HARDWOOD 40
Air Condition	03	CENTRAL 100
Heating Type	04	AIR DUCTED 100
Bedrooms		3 100
Bathrooms		3.5 100
Frame	02	WOOD FRAME 100
Stories	1.	1. 100
Units		0 100
Quality	03	Quality Level 03
DOR CODE	0100	SINGLE FAMILY
MAP NUM		MKT AREA 04
NEIGHBORHOOD/LOC	4014.00	

AREA TYPE	TOTAL GROSS AREA	PCT OF BASE	TOT ADJ AREA	SUBAREA MARKET VALUE
BAS	3,179	100	3,179	582,990
FGR	1,074	55	591	108,382
FOP	200	30	60	11,003
FSP	850	40	340	62,352
PTO	117	5	6	1,101
STR	12	10	1	183
STR	12	10	1	183
STR	32	10	3	550
STR	60	10	6	1,101
UOP	628	20	126	23,107
TOTALS	6,164		4,313	790,951

MARKET ADJUSTMENTS

TYPE	MDL	EFF. AREA	TOT ADJ PTS	EFF. BASE RATE	REPL. COST NEW	AYB	EYB	ECON	FNCT		NORM	% COND
0500	11	4,313	125.3947	188.09	811,232	2017	2017	0	0	0	2.50	97.50

1 SFR CUST – 100% - 2018 Heated Area: 3179 HX Base Yr 2018

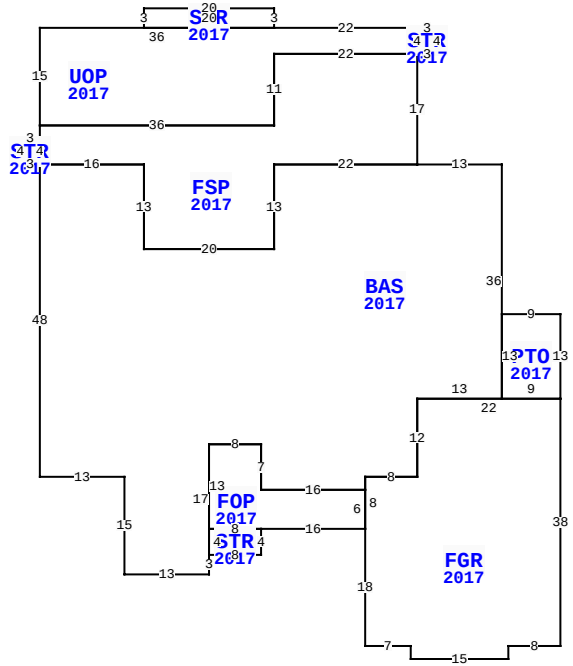

96047 BRADY POINT RD, FERNANDINA BEACH

BLD DATE		LGL DATE	
XF DATE		LAND DATE	03/15/2024 MLU
INC DATE		AG DATE	

NASSAU COUNTY PROPERTY

PAGE 1 of 1 4

VALUATION SUMMARY

VALUATION BY		STANDARD
Tax Group: 4	Tax Dist:	
BUILDING MARKET VALUE		790,951
TOTAL MARKET OB/XF VALUE		53,798
TOTAL LAND VALUE - MARKET		204,750
TOTAL MARKET VALUE		1,049,499
SOH/AGL Deduction		556,096
ASSESSED VALUE		493,403
TOTAL EXEMPTION VALUE	HX HB	50,000
BASE TAXABLE VALUE		443,403
TOTAL JUST VALUE		1,049,499
NCON VALUE		0
INCOME VALUE		
PREVIOUS YEAR MKT VALUE		1,003,324

PERMIT NUM	DESCRIPTION	AMT	ISSUED
B240002031	ADD FDG	36,973	02/20/2024
C1633384	CO ISSUED	0	06/07/2017
B1633384	NEW CONSTR	405,981	11/01/2016

SALES DATA

OFF RECORD Number	DATE	TYPE INST	Q / U	V / I	RSN CD	SALE PRICE
2076/1267	10/07/2016	WD	Q	V	01	120,000
GRANTOR: WRIGHT NORMAN R & MAR						
GRANTEE: CHISM WAYNE & LORIE						
1284/1907	12/30/2004	WD	U	V		208,000
GRANTOR: BRADY POINT PRESERVE						
GRANTEE: WRIGHT NORMAN R & M						

BUILDING NOTES

BUILDING DIMENSIONS

BAS=[YR=2017] W13 FSP=[YR=2017] N17 STR=[YR=2017] E3 N4 W3 S4$ UOP=[YR=2017] N4 W22 STR=[YR=2017] N3 W20 S3 E20$ W36 S15 E36 N11 E22$ W22 S11 W36 S2 STR=[YR=2017] W3 S4 E3 N4$ S4 E16 S13 E20 N13 E22$ W22 S13 W20 N13 W16 S48 E13 S15 E13 N3 STR=[YR=2017] E8 N4 FOP=[YR=2017] E16 FGR=[YR=2017] S18 E7 S2 E15 N2 E8 N38 PTO=[YR=2017] N13 W9 S13 E9$ W22 S12 W8 S8$ N6 W16 N7 W8 S13 E8$ W8 S4$ N17 E8 S7 E16 N2 E8 N12 E13 N36$.

EXTRA FEATURES

LN	OB/XF CODE	DESCRIPTION	BLD	CAP	L	W	UNITS	UT	Adj R	ADJ UNIT PRICE	ORIG COND	YEAR ON	YEAR ACTUAL	Q	% COND	OB/XF MKT VALUE	NOTES
1	0855	CONC PAVER	0	100	44	8	352.00	SF	10.00	10.00	100	2017	2017	3	97	3,414	
2	0855	CONC PAVER	0	100	166	4	664.00	SF	10.00	10.00	100	2017	2017	3	97	6,441	
3	1125	CB/STC 6"	0	100	22	7	154.00	SF	7.35	7.35	100	2017	2017	3	97	1,098	
4	0855	CONC PAVER	0	100	0	0	4,417.00	SF	10.00	10.00	100	2017	2017	3	97	42,845	

LAND DESCRIPTION

TOTAL OB/XF 53,798

LN	USE CODE	CLS	LAND USE DESCRIPTION	CAP	RD	LOC ZONE	FRONT	DEPTH	TOT LND UTS	UNIT TYPE	DT	DPTH FACT	% COND	TOT ADJ	UNIT PRICE	ADJ UNIT PRICE	LAND VALUE	OTHER ADJUSTMENTS AND NOTES	YEAR	DENSITY	DECL	FRZ	YR	CONSRV
1	000134	C	SFR POND	100		RSF-1	0.00	0.00	1.00	LT		1.00	1.00	1.05	195,000.00	204,750.00	204,750							

REVIEW DATE 07/10/2024 BY NW Total Acres: 0.00 Total Land Value: 204,750 Market: 0 Agricultural: 0 Common: 204,750 PRINTED 08/06/2024 BY SYS